dimensions & volumes

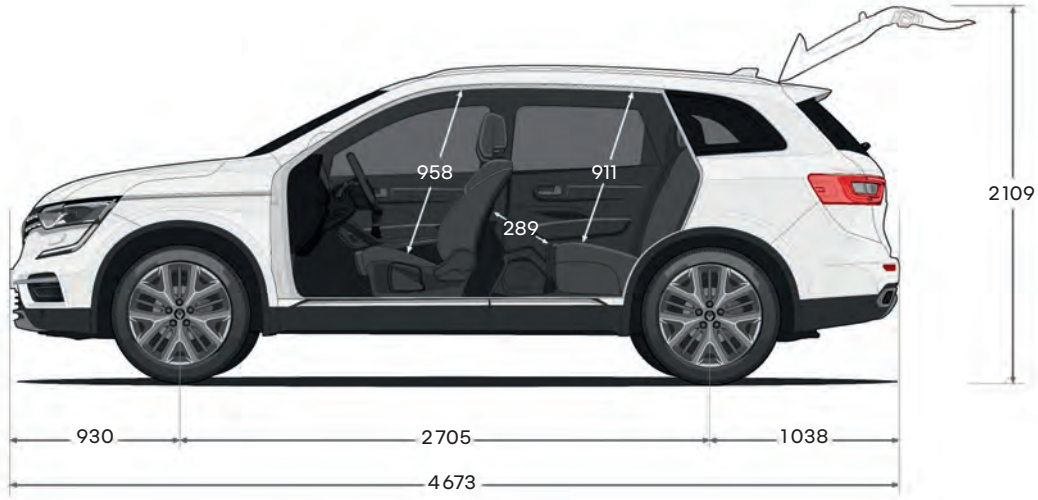

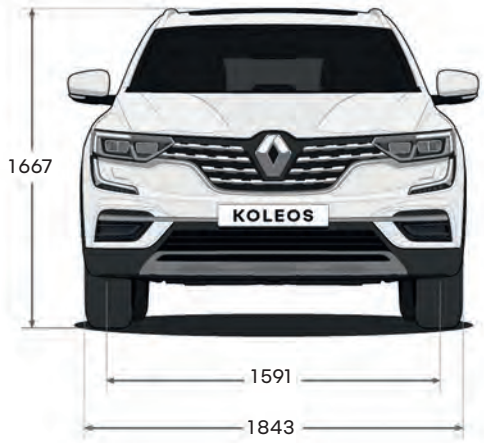

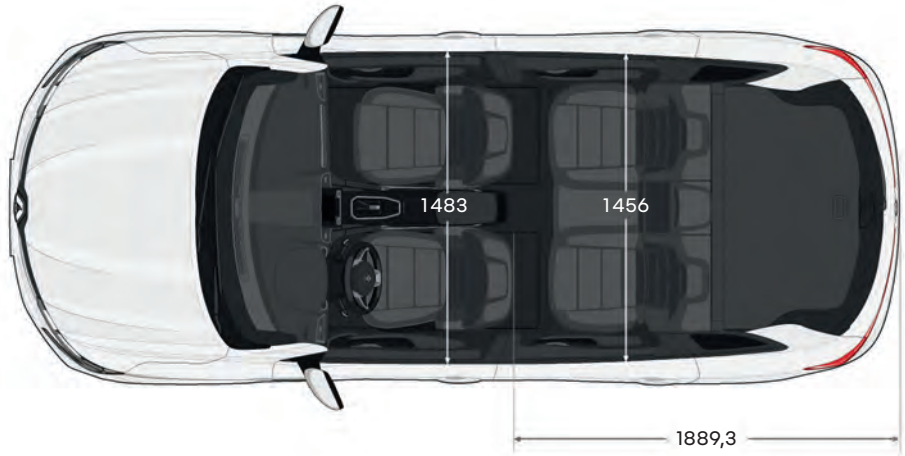

boot volume - VDA standard (litres)	
min. boot volume	493
max. boot volume	1707
space under false floor	27/36

dimensions (in mm).

engines

	life	zen	zen 4x4	intens 4x2	intens 4x4
engine & transmission					
Type			2.5L CVT		
Capacity (cc)			2488		
Number of cylinders/valves			4/16		
Bore x stroke (mm)			89 x 100		
Maximum power (kW @ rpm)			126 @ 6000		
Maximum torque (Nm @ rpm)			226 @ 4400		
Fuel type (recommended)			Unleaded		
Fuel injection type			Multipoint		
Transmission type			X-tronic CVT automatic transmission		
Driven wheels	4x2		4X4	4x2	4x4
braking, suspension & steering					
Front braking system (diameter x thickness)			Ventilated disc - 296x26		
Rear braking system (diameter x thickness)			Ventilated disc - 292x16		
Front suspension			MacPherson Strut		
Rear suspension			Multi Link		
Turning circle between kerbs (m)			11.4		
performance					
Max. speed (km/h)	200		199	200	199
0-100 km/h (seconds)	9.5		9.8	9.5	9.8
fuel consumption^					
Emission standards			Euro 5		
Combined cycle (L/100km)	8.1		8.3	8.1	8.3
CO2 emissions (g/km)	188		192	188	192
Extra urban cycle (L/100km)	6.7		6.9	6.7	6.9
Urban cycle (L/100km)	10.4		10.7	10.4	10.7
Fuel tank (L)			60		
dimensions & weights^^					
Kerb weight (unladen) (kg)	1558		1626	1558	1626
Payload (kg)	573		539	573	539
Maximum towing weight, braked (kg)			2000		
Maximum towing weight, unbraked (kg)			750		
Maximum towing weight, download (kg)			150		

^ Vehicle tested in accordance with ADR 81/02 based on combined cycle (city/highway). Actual fuel consumption and CO2 emissions depend on factors such as traffic conditions, vehicle condition and how you drive.
^^ The weights indicated for towing capacities and downball weights are for a basic vehicle without options. These may vary depending on your vehicle's equipment, accessories, passengers & any cargo on board. Please consult your Renault Dealership or the vehicle's owner handbook to confirm your towing requirements to ensure compliance with approved towing limits.

equipment & options

	life	zen	intens
passive safety			
Driver & front passenger airbags	▪	▪	▪
Driver & front passenger chest side airbag	▪	▪	▪
Front & rear curtain airbags	▪	▪	▪
Front seat belts with pretensioners & load limiter	▪	▪	▪
Seat belt warning light & tone for driver & all passengers	▪	▪	▪
Height adjustable front headrests	▪	▪	-
Height & tilt adjustable front headrests	-	-	▪
Height adjustable rear headrests	▪	▪	▪
ISOFIX child seat fixing points on rear outermost seats	▪	▪	▪
3 Child seat anchorage points for rear seats	▪	▪	▪
Child safety lock on rear doors	▪	▪	▪
Rear window child-lock function (driver door control panel)	▪	▪	▪
Engine immobiliser	▪	▪	▪
active safety			
Electronic Stability Control (ESC)	▪	▪	▪
Anti-lock Braking System (ABS)	▪	▪	▪
Emergency Brake Assist (EBA)	▪	▪	▪
Electronic Brake-force Distribution (EBD)	▪	▪	▪
Emergency warning lights activated under heavy braking	▪	▪	▪
Active Emergency Braking System (AEBS) - interurban	▪	▪	▪
Forward Collision Warning system (FCW)	▪	▪	▪
Lane Departure Warning system (LDW)	▪	▪	▪
Blind Spot Warning (BSW)	▪	▪	▪
Cruise control with speed limiter	▪	▪	▪
Rear view camera with moving guidance lines	▪	▪	▪
Front, rear & side parking sensors	▪	▪	▪
Hill Start Assist (HSA)	▪	▪	▪
Tyre pressure monitor	▪	▪	▪
exterior lighting			
Pure Vision LED headlights	▪	▪	▪
C-Shaped LED front daytime running lights	▪	▪	▪
Rear fog light	▪	▪	▪
LED reversing lights	-	▪	▪
Sweeping rear turn signal	-	▪	▪
LED mirror indicator lights	▪	▪	▪
connectivity & multimedia			
AM/FM/DAB Radio	▪	▪	▪
3D Sound by Arkamys with 8x speakers	▪	▪	▪
Bluetooth® phone pairing with audio streaming*	▪	▪	▪
Apple CarPlay® & Android Auto® smartphone replication*	▪	▪	▪
2x Front USB ports & 1x AUX port	▪	▪	▪
2x Rear USB charging ports	-	▪	▪
12 Volt socket - front, rear & boot	▪	▪	-
12 Volt socket - front & boot	▪	-	▪
7» Landscape multimedia touchscreen	▪	-	-
8.7» Portrait multimedia touchscreen	-	▪	▪
Instrument display with colour 7" TFT screen & personalised design settings	▪	▪	▪
Satellite navigation	-	▪	▪
convenience			
Remote central locking	▪	▪	▪
Auto-door lock when driving	▪	▪	▪

	life	zen	intens
Hands-free key card	▪	▪	▪
Engine start button	▪	▪	▪
Automatic 'walk away' door locking	▪	▪	▪
Automatic dusk-sensing headlights	▪	▪	▪
Automatic high/low beam	▪	▪	▪
Automatic windscreen wipers with rain sensor	▪	▪	▪
Electric parking brake	▪	▪	▪
Easy Park Assist hands-free parking system	-	▪	▪
Side mirror tilting when reverse gear selected	-	-	▪
ECO Mode	▪	▪	▪
Hill descent control system (4x4)	-	▪(4x4 only)	▪(4x4 only)
All mode 4x4-i	-	▪(4x4 only)	▪(4x4 only)
Automatic dimming rear view mirror	-	▪	▪
Electric demisting door mirrors	▪	▪	▪
Automatic folding door mirrors	▪	▪	▪
Split folding rear seats 60:40	▪	▪	▪
One-touch easy folding rear seat system	-	▪	▪
Electric front & rear windows with anti-pinch function & driver & front passenger one-touch control	▪	▪	▪
Front LED cabin lights	▪	▪	▪
Rear LED cabin lights	-	▪	▪
Boot lighting	▪	▪	▪
Driver & front passenger sun visor with illuminated mirror	▪	▪	-
Front & rear door storage compartments	▪	▪	▪
Front seat back storage nets	▪	▪	▪
Flexible rear boot cover	▪	▪	▪
Powered hands-free tailgate	-	▪	▪
Spare wheel - 17" steel	▪	▪	▪
comfort			
Height adjustable driver & front passenger seat	▪	▪	▪
Electrically adjustable driver's seat with electric lumbar support	-	▪	-
Electrically adjustable driver & front passenger seats with electric lumbar adjustment for driver	-	-	▪
Front seats with cushion length adjustment & relax headrests	-	-	▪
Memory & massage driver seat	-	-	▪
Heated front seats	-	▪	▪
Ventilated front seats	-	-	▪
Black cloth & leatherette upholstery	▪	-	-
Black leather upholstery	-	▪	-
Black Nappa leather upholstery	-	-	▪
Sliding armrest with closed storage & 2 rear air vents	▪	▪	▪
Height & reach adjustable, leather covered steering wheel	▪	▪	▪
Reclining rear seats	▪	▪	▪
Rear armrest with 2 cup holders	▪	▪	▪
Dual zone climate control air conditioning	▪	▪	▪
Heated & cooled front cup holder	▪	▪	▪
Customisable interior ambient cabin lighting - front door panels & centre console	▪	▪	▪
Customisable interior ambient cabin lighting - rear door panels	-	▪	▪
Welcome sequence with lighting signature illumination	▪	▪	▪
Electric panoramic sunroof - front opening, tilting, sliding, & anti-pinch	-	-	▪
Rear privacy glass	▪	▪	▪

equipment & options

	life	zen	intens
interior styling			
Interior cabin trim - satin chrome	▪	-	-
Interior cabin trim - brushed silver	-	▪	-
Interior cabin trim - wood grain	-	-	-
front chrome 'KOLEOS' door sill plates	-	▪	▪
exterior styling			
18" Two-tone alloy wheels	-	▪	-
19" Two-tone alloy wheels	-	-	▪
Tyres	225/60 R18	225/60 R18	225/55 R19
Chrome on window trim, lower side body & bumper trims	▪	▪	▪
Chrome trim on lower side body & rear bumper	▪	▪	▪
Chrome door handles	▪	▪	▪
Satin grey roof rails	▪	▪	▪
Shark fin antenna	▪	▪	▪

* Compatibility may vary depending on phone

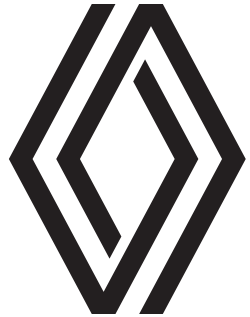

For more information visit renault.com.au

For more information, call 1800 009 008 or visit www.renault.com.au. Details are correct at the time of publication for MY22 vehicles and are subject to change. Vehicles depicted in this brochure are overseas models and are shown for illustration purposes only; Australian vehicles may differ in features, specifications, equipment, accessories and/or colour. RVDA Pty Ltd reserves the right to discontinue or change its models at its discretion and without prior notice, including features, specifications, equipment, accessories available and colour. The colours in the photographs may vary from actual colours. Please consult your Renault dealer for the latest information on models, features, specifications, prices, options and availability. Publication date - November 2022. RVDA Pty Ltd, 2A Hill Road, Lidcombe NSW 2141.

Renault recommends Castrol