Cylinder Drawings

UB70E20595

UB Series: Underbody Cylinder

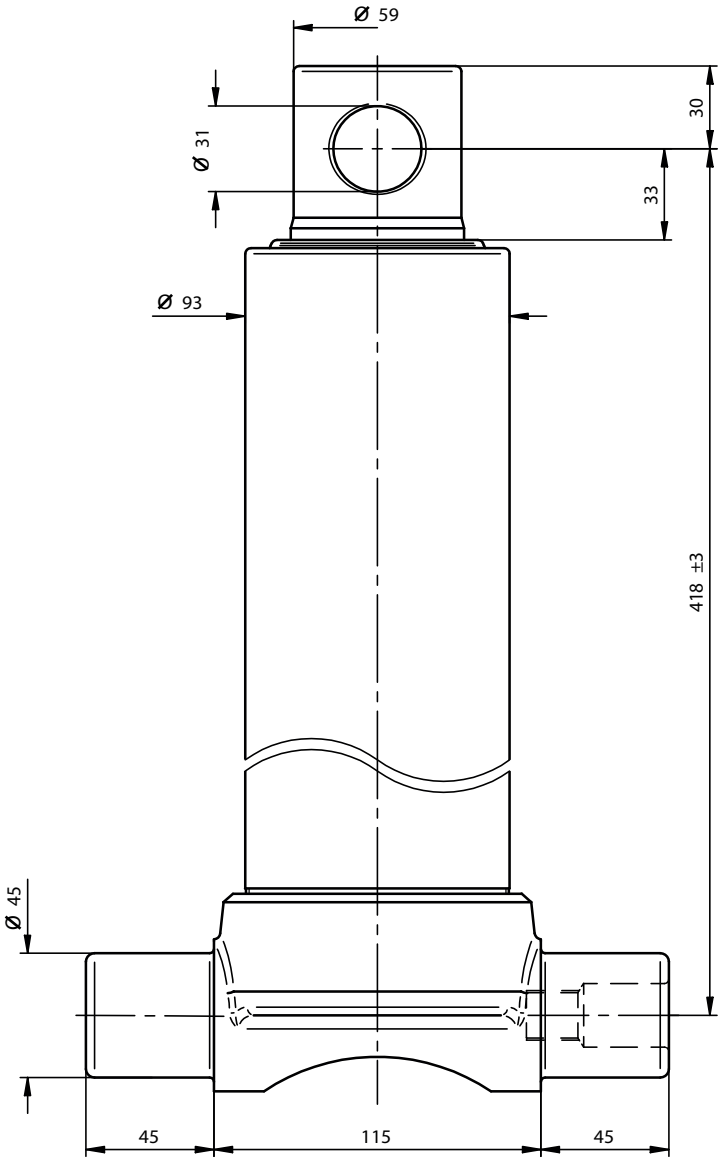

UB Series: Underbody Cylinder	
Max stroke:	595 mm
Max pressure:	180 bar
Oil volume:	2.3 litres
Weight:	21.4 kg
Tube dimensions:	61 - 76
Tube surface treatment:	Tenifer
Inlet pin required:	BU98 (1/2")
Tipping capacity:	5.5 Ton. @180 Bar

Technical specifications are subject to change without notice.

JOST UK Ltd
Edbro House, Nelson Street, Bolton, Lancashire, BL3 2JJ, UK
Tel: +44 (0) 120 4528888 Fax: +44 (0) 120 4531957
Web: www.edbro.com

Rev 2, August 2020

Cylinder Drawings

UB90E30790

UB Series: Underbody Cylinder

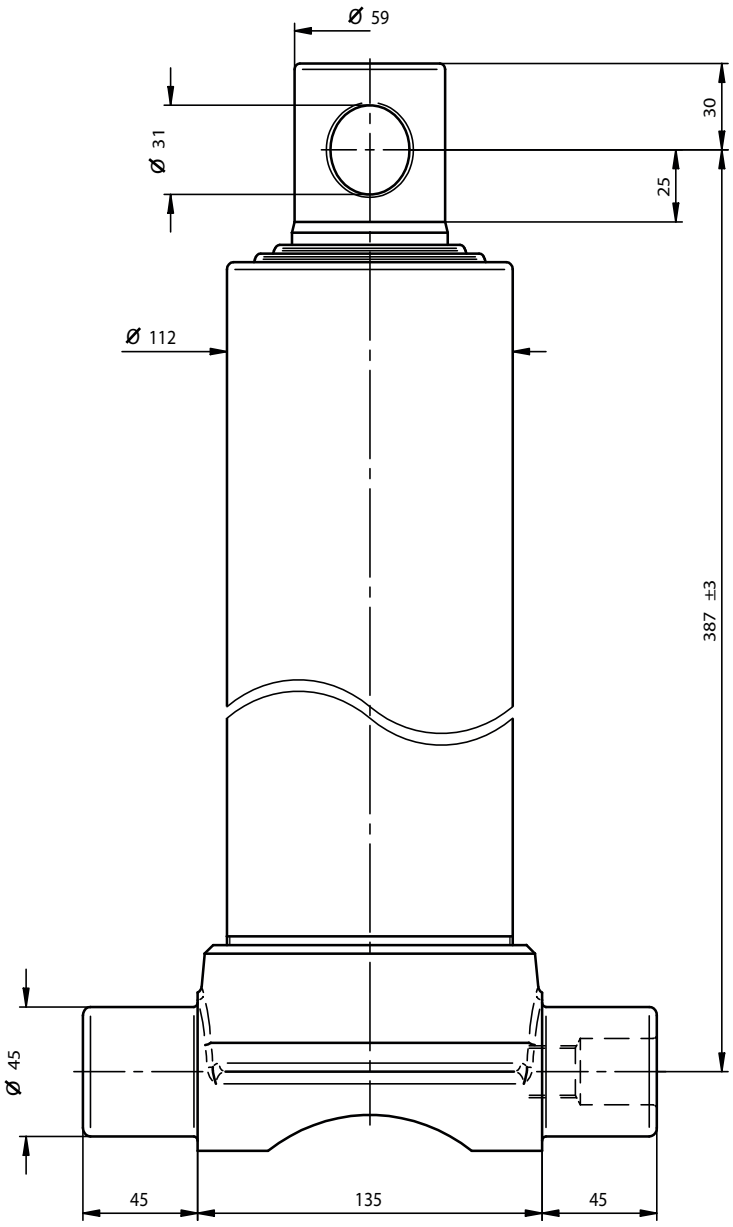

UB Series: Underbody Cylinder	
Max stroke:	790 mm
Max pressure:	180 bar
Oil volume:	3.8 litres
Weight:	26.9 kg
Tube dimensions:	61 - 76 - 91
Tube surface treatment:	Tenifer
Inlet pin required:	BU98 (1/2")
Tipping capacity:	7.5 Ton. @180 Bar

Technical specifications are subject to change without notice.

JOST UK Ltd
Edbro House, Nelson Street, Bolton, Lancashire, BL3 2JJ, UK
Tel: +44 (0) 120 4528888 Fax: +44 (0) 120 4531957
Web: www.edbro.com

Rev 2, August 2020

Cylinder Drawings

UB90E30893

UB Series: Underbody Cylinder

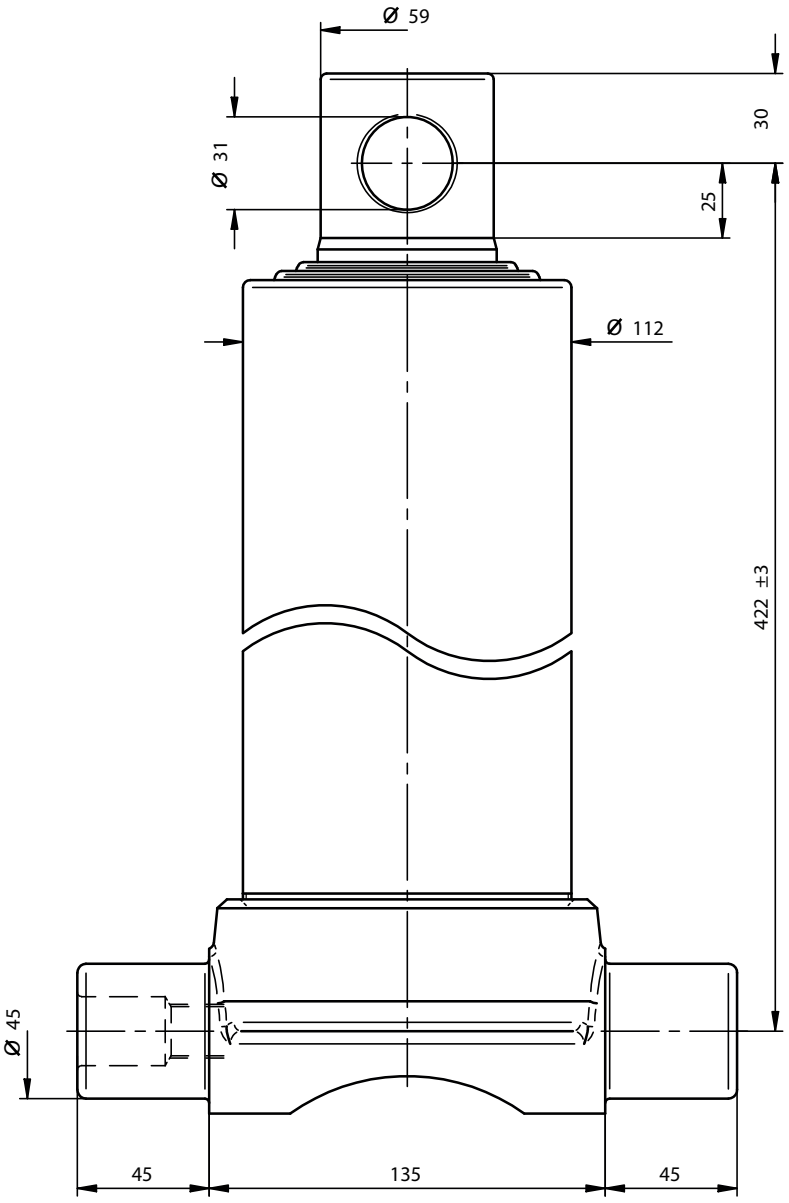

UB Series: Underbody Cylinder	
Max stroke:	893 mm
Max pressure:	180 bar
Oil volume:	4.2 litres
Weight:	29.1 kg
Tube dimensions:	61 - 76 - 91
Tube surface treatment:	Tenifer
Inlet pin required:	BU98 (1/2")
Tipping capacity:	7.5 Ton. @180 Bar

Technical specifications are subject to change without notice.

JOST UK Ltd
Edbro House, Nelson Street, Bolton, Lancashire, BL3 2JJ, UK
Tel: +44 (0) 120 4528888 Fax: +44 (0) 120 4531957
Web: www.edbro.com

Rev 2, August 2020

Cylinder Drawings

UB90E31043

UB Series: Underbody Cylinder

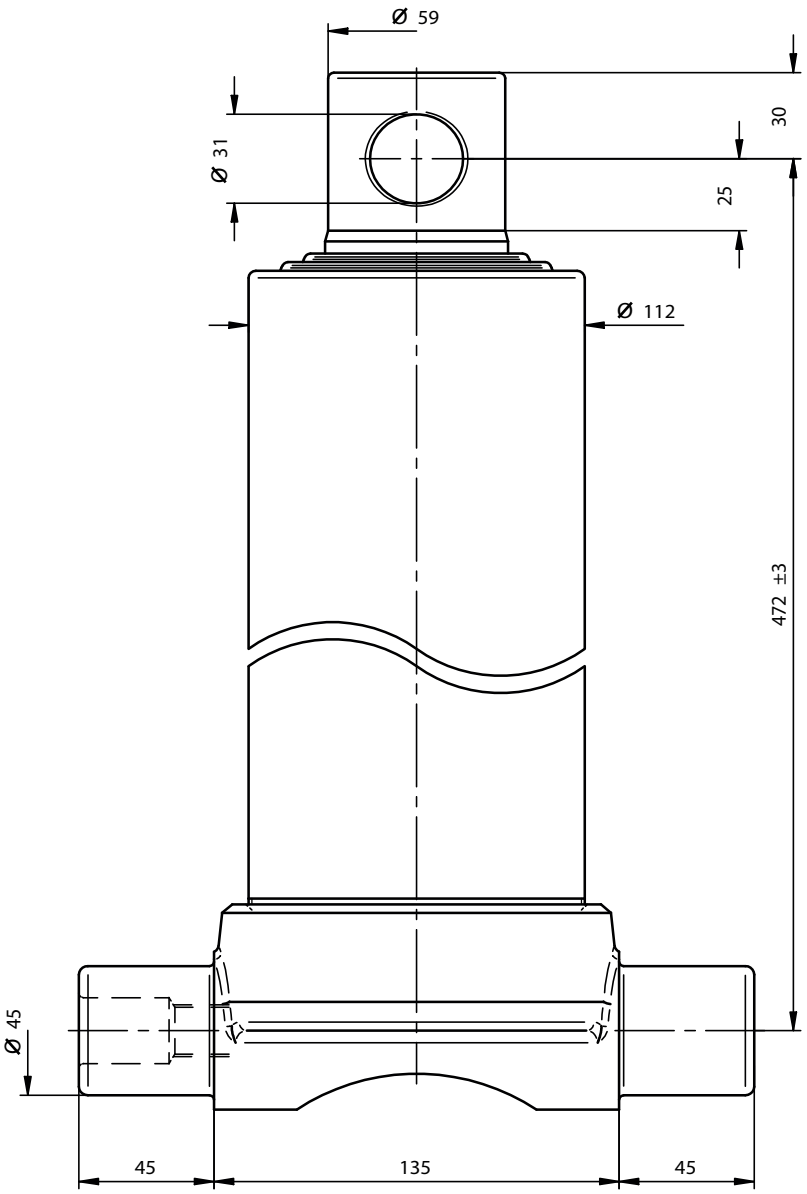

UB Series: Underbody Cylinder	
Max stroke:	1043 mm
Max pressure:	180 bar
Oil volume:	5.0 litres
Weight:	34 kg
Tube dimensions:	61 - 76 - 91
Tube surface treatment:	Tenifer
Inlet pin required:	BU98 (1/2")
Tipping capacity:	7.5 Ton. @180 Bar

Technical specifications are subject to change without notice.

JOST UK Ltd
Edbro House, Nelson Street, Bolton, Lancashire, BL3 2JJ, UK
Tel: +44 (0) 120 4528888 Fax: +44 (0) 120 4531957
Web: www.edbro.com

Rev 2, August 2020

Cylinder Drawings

UB100E41290

UB Series: Underbody Cylinder

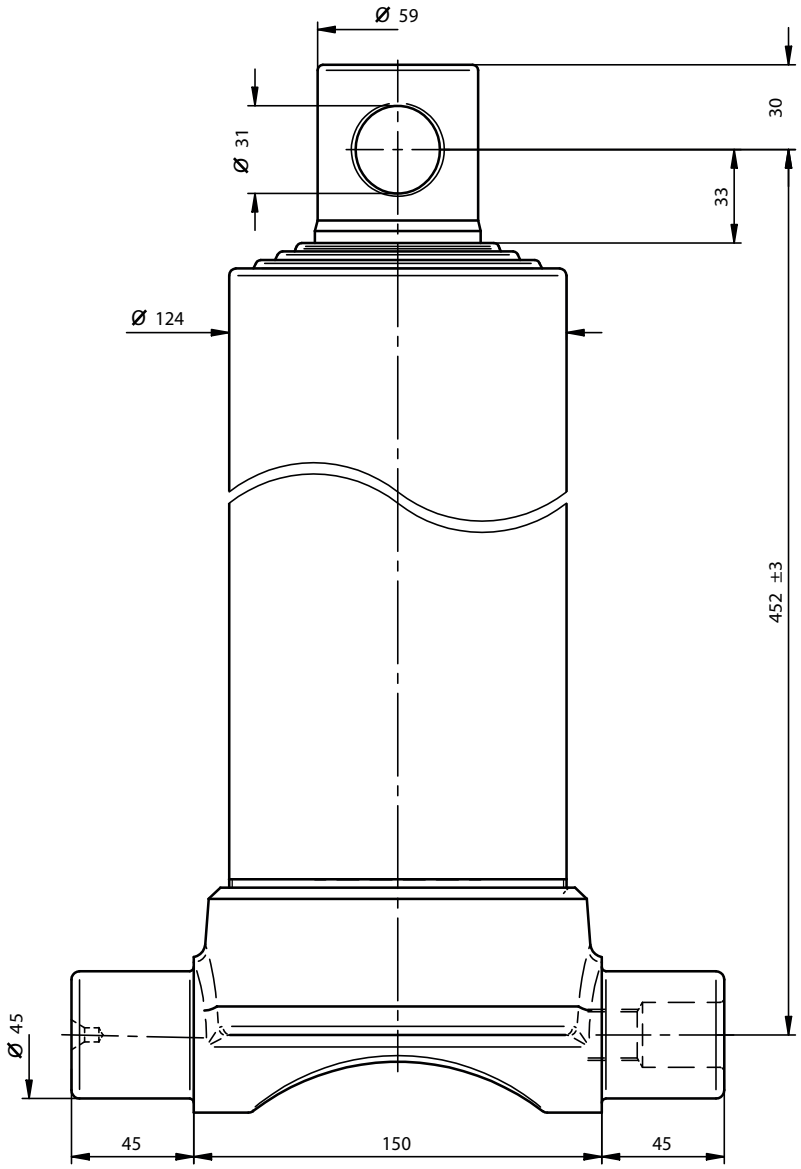

UB Series: Underbody Cylinder	
Max stroke:	1290 mm
Max pressure:	180 bar
Oil volume:	7.5 litres
Weight:	35.9 kg
Tube dimensions:	61 - 76 - 91 - 107
Tube surface treatment:	Tenifer
Inlet pin required:	BU98 (1/2")
Tipping capacity:	10 Ton. @180 Bar

Technical specifications are subject to change without notice.

JOST UK Ltd
Edbro House, Nelson Street, Bolton, Lancashire, BL3 2JJ, UK
Tel: +44 (0) 120 4528888 Fax: +44 (0) 120 4531957
Web: www.edbro.com

Rev 2, August 2020

Cylinder Drawings

UB100E41510

UB Series: Underbody Cylinder

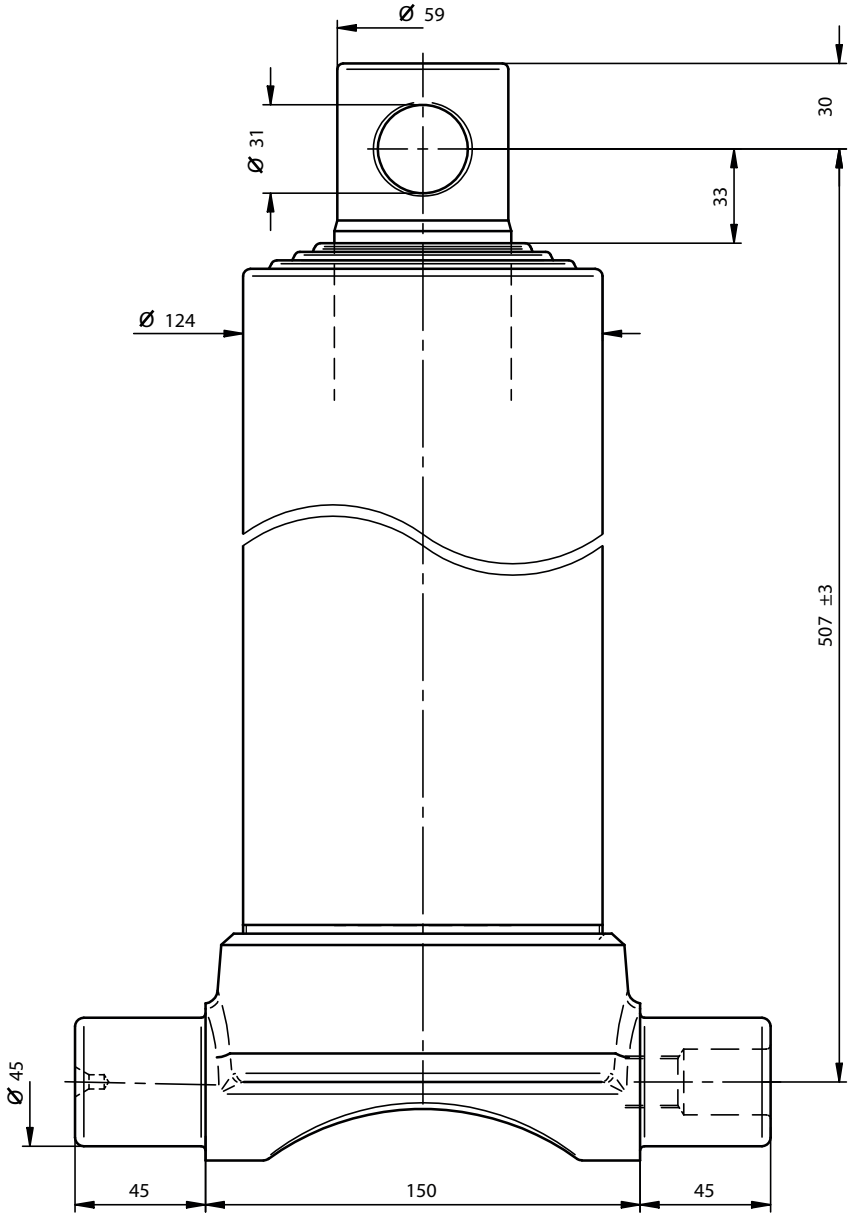

UB Series: Underbody Cylinder	
Max stroke:	1510 mm
Max pressure:	180 bar
Oil volume:	8.8 litres
Weight:	39.9 kg
Tube dimensions:	61 - 76 - 91 - 107
Tube surface treatment:	Tenifer
Inlet pin required:	BU98 (1/2")
Tipping capacity:	10 Ton. @180 Bar

Technical specifications are subject to change without notice.

JOST UK Ltd
Edbro House, Nelson Street, Bolton, Lancashire, BL3 2JJ, UK
Tel: +44 (0) 120 4528888 Fax: +44 (0) 120 4531957
Web: www.edbro.com

Rev 2, August 2020

Cylinder Drawings

UB100E41710

UB Series: Underbody Cylinder

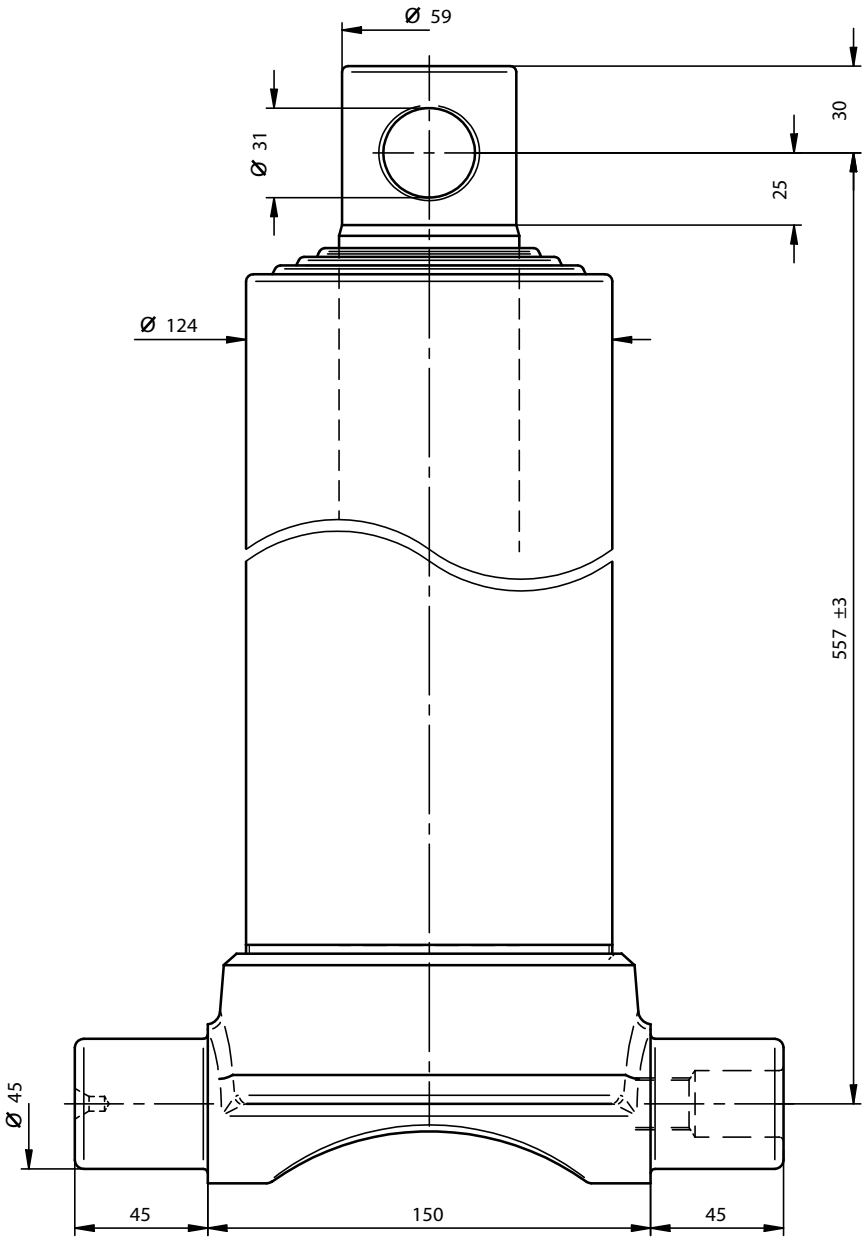

UB Series: Underbody Cylinder	
Max stroke:	1710 mm
Max pressure:	180 bar
Oil volume:	10 litres
Weight:	43.6 kg
Tube dimensions:	61 - 76 - 91 - 107
Tube surface treatment:	Tenifer
Inlet pin required:	BU98 (1/2")
Tipping capacity:	10 Ton. @180 Bar

Technical specifications are subject to change without notice.

JOST UK Ltd
Edbro House, Nelson Street, Bolton, Lancashire, BL3 2JJ, UK
Tel: +44 (0) 120 4528888 Fax: +44 (0) 120 4531957
Web: www.edbro.com

Rev 2, August 2020

Cylinder Drawings

UB120E502130

UB Series: Underbody Cylinder

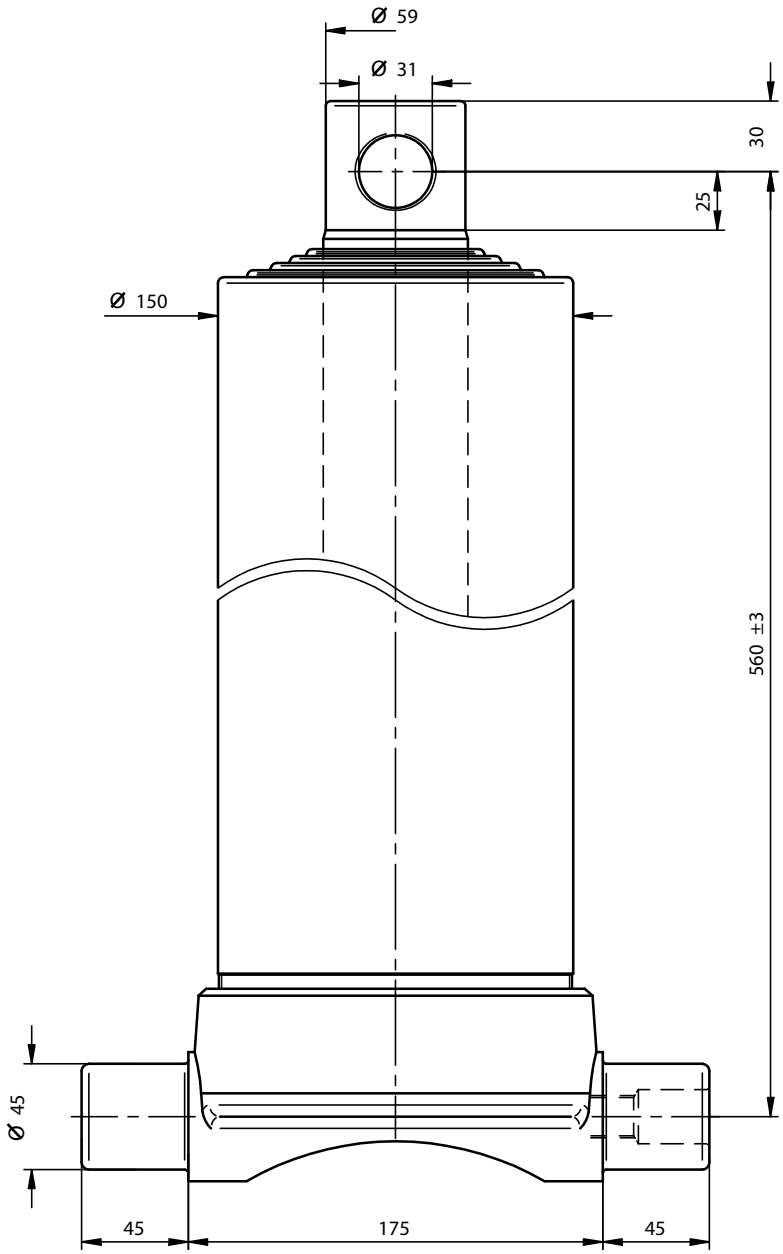

UB Series: Underbody Cylinder	
Max stroke:	2130 mm
Max pressure:	180 bar
Oil volume:	15.5 litres
Weight:	59.8 kg
Tube dimensions:	61 - 76 - 91 - 107 - 126
Tube surface treatment:	Tenifer
Inlet pin required:	BU98 (1/2")
Tipping capacity:	10 Ton. @180 Bar

Technical specifications are subject to change without notice.

JOST UK Ltd
Edbro House, Nelson Street, Bolton, Lancashire, BL3 2JJ, UK
Tel: +44 (0) 120 4528888 Fax: +44 (0) 120 4531957
Web: www.edbro.com

Rev 2, August 2020

Cylinder 3 stage with spheric mounting

CD15SS3005432BA12302

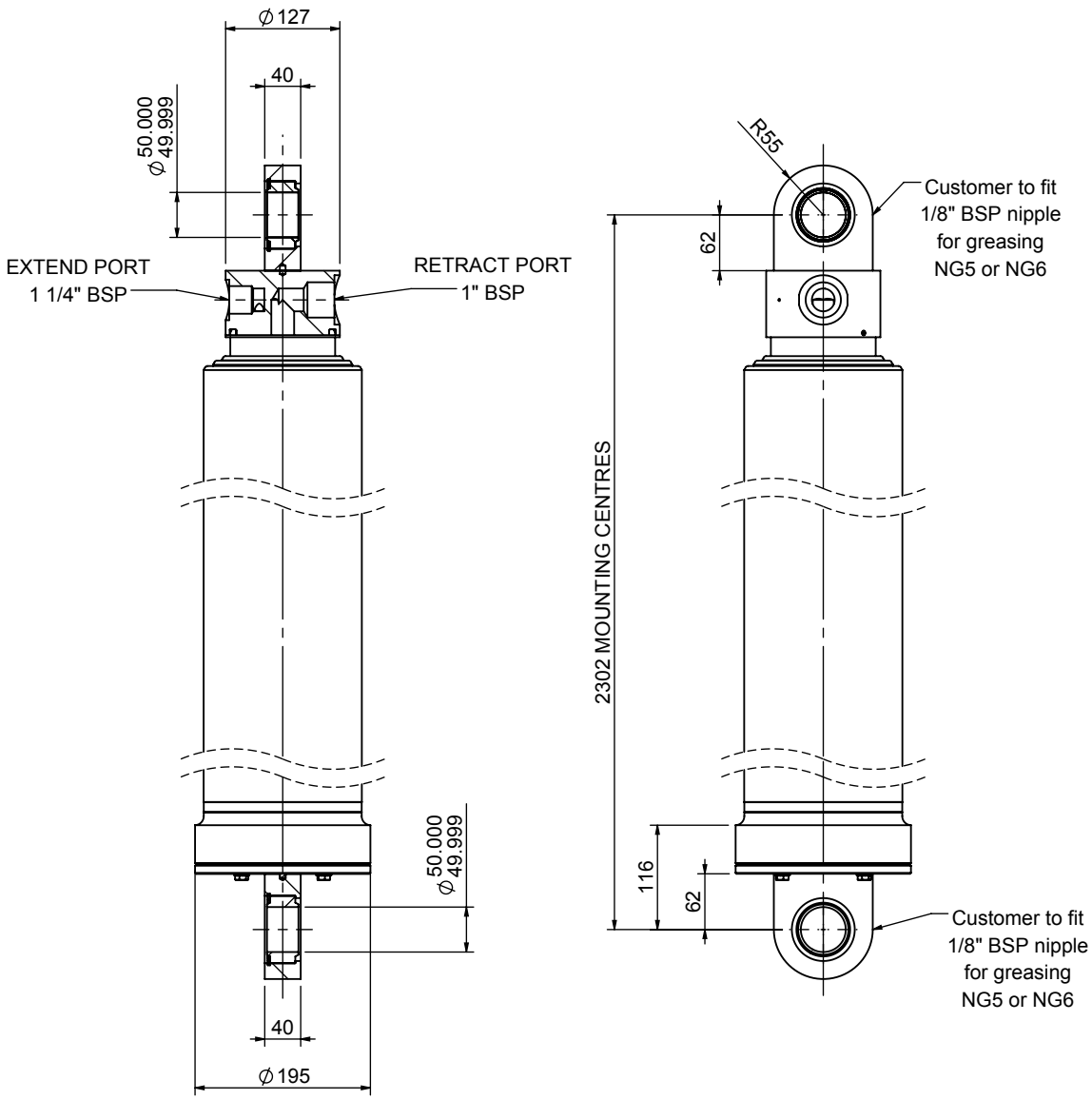

ALL TUBES HARD CHROMED

SPECIFICATION

Stage	Tube Diameter	Tube Bore	Length	Stroke	Swept Volume (Extend)	Swept Volume (Retract)
Base	176	163	2062	-	-	-
1	155	144	2028	1798	37.5	3.6
2	136	125	2028	1809	29.5	3.2
3	117	106	2053	1824	22.4	2.8
Total (+5/-10)				5431	mm	
Final stroke reduced by				0	mm	
Swept Vol (Extend)				89.4	Litres	
Swept Vol (Retract)				9.6	Litres	
Maximum Pressure				190	Bar	
Operating Pressure				175	Bar	
Cylinder Mass				197	kg	

Stage	Thrust @ Max.Press		Thrust @ Op.Press			
	Extend	Retract	Extend	Retract		
1	40.4	3.9	37.2	3.6		
2	31.5	3.4	29.1	3.1		
3	23.8	2.9	21.9	2.7		

NOTES

1. This cylinder is intended for load ejection purposes only and should not be used for compacting.
2. Cylinder is painted in primer to RAL5013.
3. Refer to www.edbro.com for;-
   - Bracket details
   - Installation instructions that must be observed
   - Correct oil selection
   - An explanation of ejection capacity

JOST UK Ltd
Edbro House, Nelson Street, Bolton, England, BL3 2JJ
Tel +44 (0) 1204 528888 Fax +44 (0) 1204 531957
Email: sales@jost-world.com Web: www.edbro.com

Technical Specifications are subject to change without notice
Date Created/Updated: 20 May 2019
Refer www.edbro.com to confirm latest specification
All dimensions are in 'mm', unless otherwise stated

Cylinder 3 stage front end with outer cover

CS070032895N12A28

****ALLOW 50mm TO REMOVE CAP FOR SERVICING**

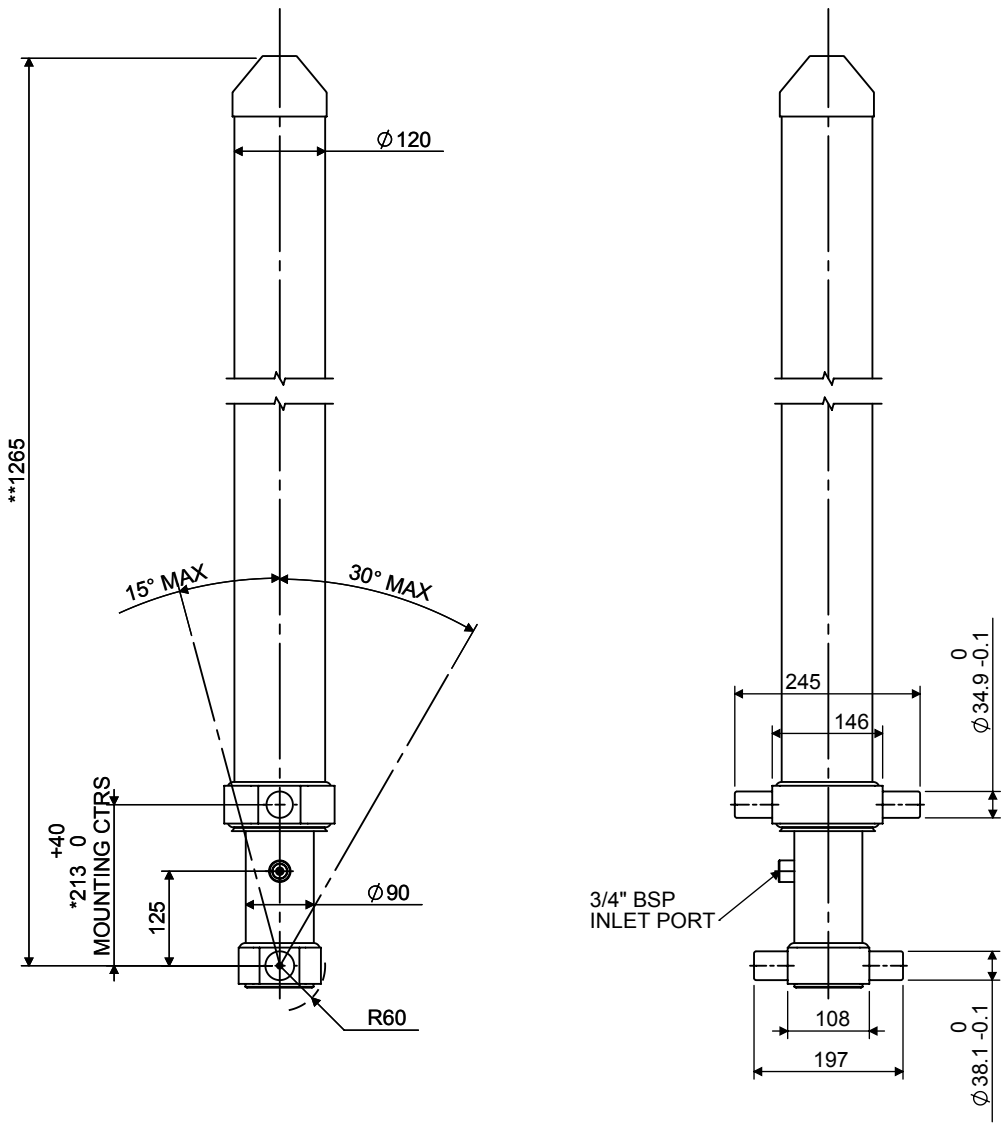

***Includes 10mm Pull Out.**

SPECIFICATION		TIPPING CAPACITY : 7-11 TONNES***		
Stage	Diameter	Length	Stroke	Swept Volume
-	-	-	-	-
-	-	-	-	-
OUTER COVER	120	1041	-	-
0	90	1167	-	-
1	75	1137	962	4
2	60	1138	963	3
3	45	1160	970	2
		Total (+5/-10)	2895	9
Final stroke reduced by	0	Priming Volume		2
Cylinder Mass (Kg)	60	Total Volume (Litres)		11
Maximum Pressure (Bar)	175	Max. first stage thrust		40 KN

***TIPPING CAPACITY AT WORKING PRESSURE

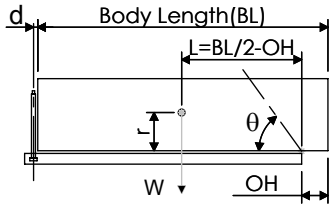

BODY LENGTH (BL)						OH
3750		4000		4250		
7	46°	7	43°			150
9	50°	8	47°	8	43°	450
		11	51°	10	47°	750

Tipping angle (θ)

Body + payload mass,W (tonne)

d = 111; r = 500; Working Pressure 150 bar

For guidance only;
Higher working pressures and tipping capacities may be possible.
To check your application email - applications@edbro.co.uk

NOTES

1. This cylinder is for lifting purposes only and side load conditions should be avoided
2. Cylinder is painted in primer paint to RAL5013
3. Refer to www.edbro.com for;-
   - Bracket details
   - Installation instructions that must be observed
   - Correct oil selection
   - An explanation of tipping capacity

Edbro
SETTING THE INDUSTRY STANDARD

Edbro plc
Nelson Street, Bolton, England, BL3 2JJ
Tel +44 (0) 1204 528888 Fax +44 (0) 1204 531957
Email: postmaster@edbro.com Web: www.edbro.com

Technical Specifications are subject to change without notice

Date Created/Updated: 06 January 2015

Refer www.edbro.com to confirm latest specification
All dimensions are in 'mm', unless otherwise stated

Cylinder 3 stage front end with outer cover

CS070033195N12A28

****ALLOW 50mm TO REMOVE CAP FOR SERVICING**

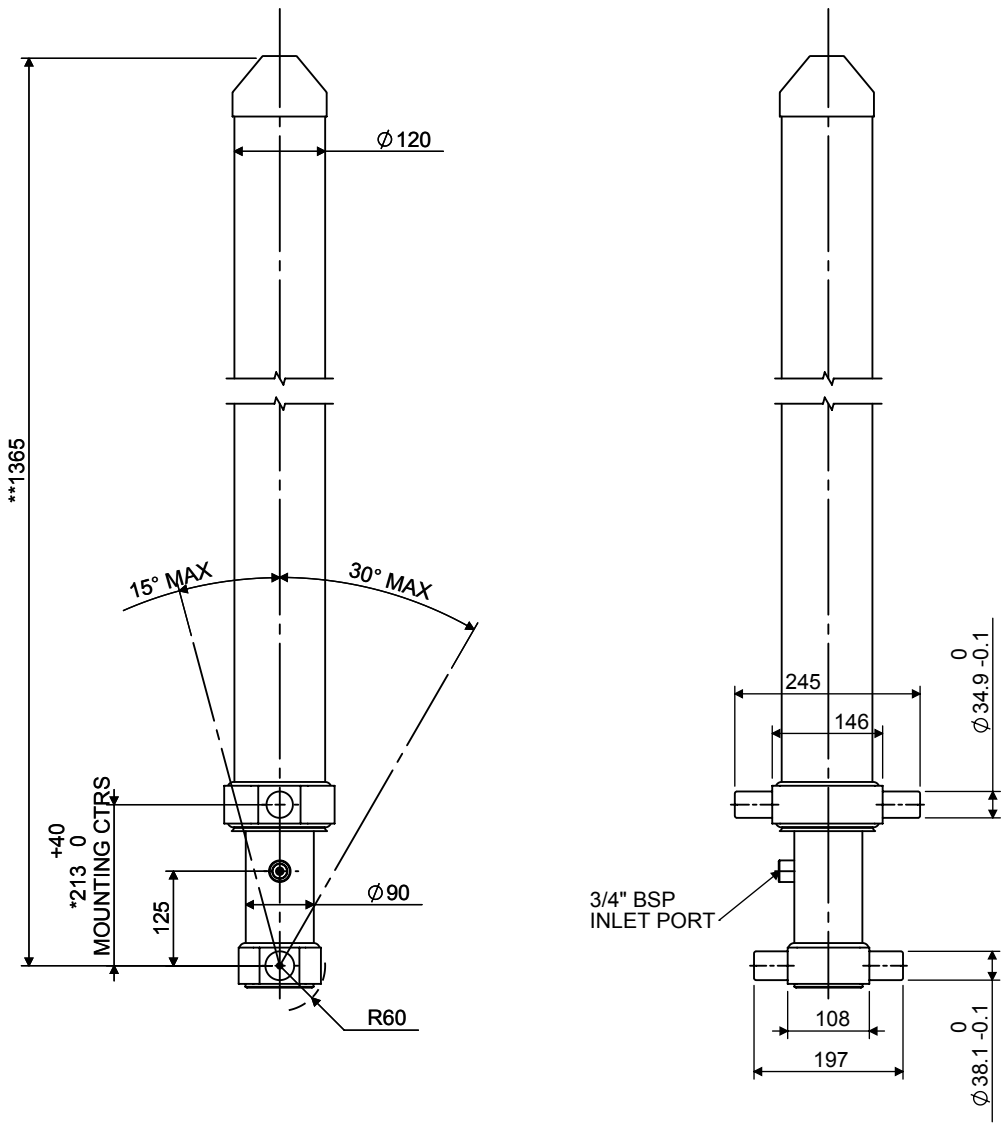

***Includes 10mm Pull Out.**

SPECIFICATION		TIPPING CAPACITY : 7-10 TONNES***		
Stage	Diameter	Length	Stroke	Swept Volume
-	-	-	-	-
-	-	-	-	-
OUTER COVER	120	1141	-	-
0	90	1267	-	-
1	75	1237	1062	5
2	60	1238	1063	3
3	45	1260	1070	2
		Total (+5/-10)	3195	10
Final stroke reduced by	0	Priming Volume		2
Cylinder Mass (Kg)	64	Total Volume (Litres)		12
Maximum Pressure (Bar)	175	Max. first stage thrust		40 KN

***TIPPING CAPACITY AT WORKING PRESSURE

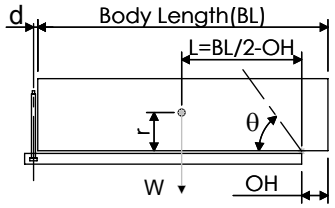

BODY LENGTH (BL)						OH
4250		4500		4750		
7	45°	7	42°			150
8	48°	8	45°	7	43°	450
10	53°	9	49°	9	46°	750

Tipping angle (θ)

Body + payload mass,W (tonne)

d = 111; r = 500; Working Pressure 150 bar

For guidance only;
Higher working pressures and tipping capacities may be possible.
To check your application email - applications@edbro.co.uk

NOTES

1. This cylinder is for lifting purposes only and side load conditions should be avoided
2. Cylinder is painted in primer paint to RAL5013
3. Refer to www.edbro.com for;-
   - Bracket details
   - Installation instructions that must be observed
   - Correct oil selection
   - An explanation of tipping capacity

Edbro
SETTING THE INDUSTRY STANDARD

Edbro plc
Nelson Street, Bolton, England, BL3 2JJ
Tel +44 (0) 1204 528888 Fax +44 (0) 1204 531957
Email: postmaster@edbro.com Web: www.edbro.com

Technical Specifications are subject to change without notice

Date Created/Updated: 06 January 2015

Refer www.edbro.com to confirm latest specification
All dimensions are in 'mm', unless otherwise stated

Cylinder 3 stage front end with plain eye

CS10EE302159A200

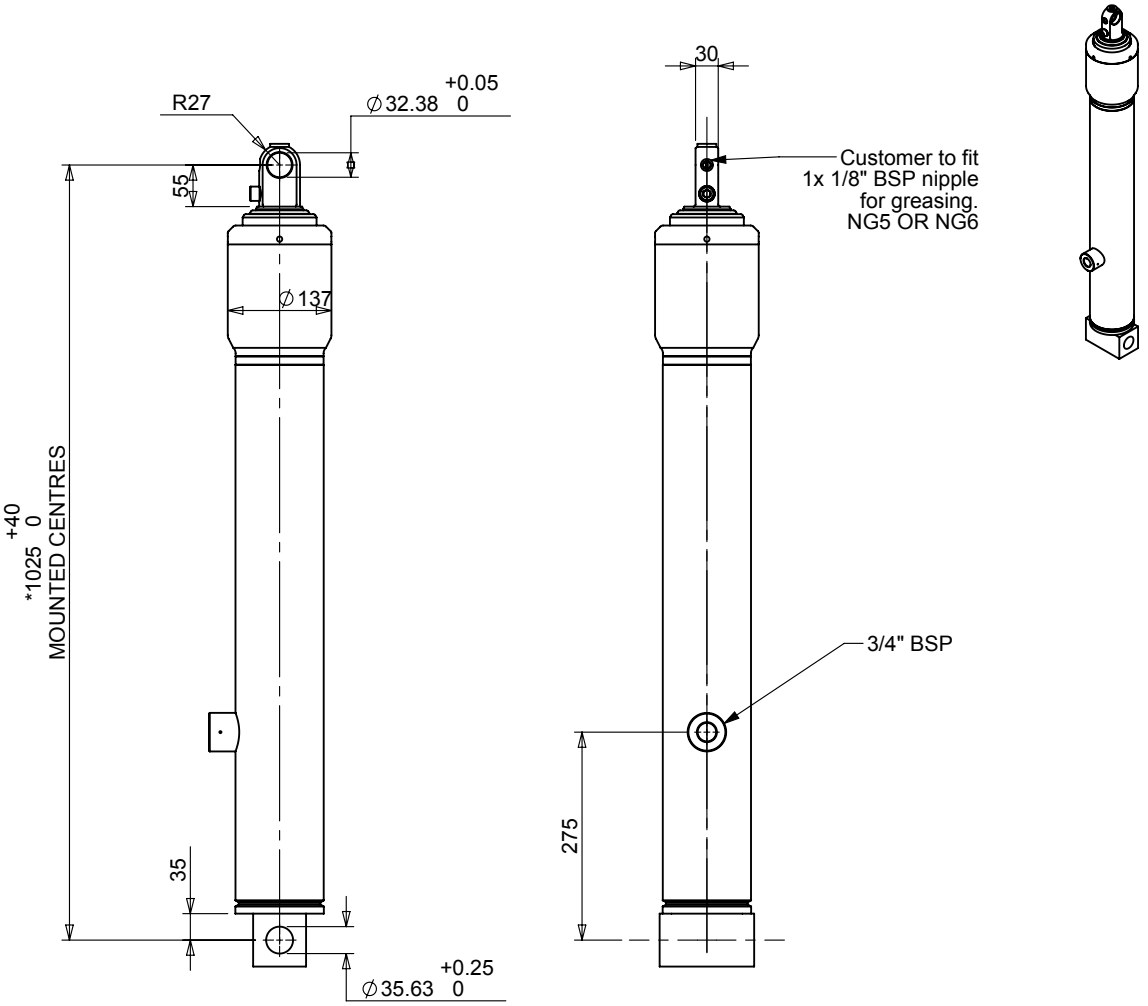

SPECIFICATION		TIPPING CAPACITY : SEE BELOW***		
Stage	Diameter	Length	Stroke	Swept Volume
-	-	-	-	-
-	-	-	-	-
-	-	-	-	-
0	117	870	-	-
1	98	890	710	5
2	79	890	722	4
3	63	890	727	2
		Total (+5/-10)	2159	11
Final stroke reduced by	0	Priming Volume		2.5
Cylinder Mass (kg)	47	Total Volume (Litres)		13.5
Maximum Pressure (Bar)	150	Max. first stage thrust		225 kN

***TIPPING CAPACITY AT WORKING PRESSURE

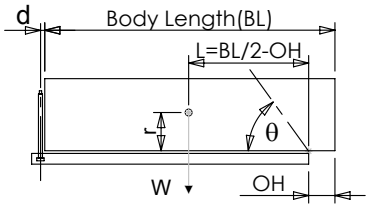

BODY LENGTH (BL)						OH
8500		9000		9500		
51	50°	48	47°	46	44°	150
55	52°	52	49°	49	46°	450
61	54°	56	51°	53	48°	750

Tipping angle (θ)

Body + payload mass,W (tonne)

d = 0; r = 900; Working Pressure 135 bar

For guidance only;
Higher working pressures and tipping capacities may be possible.
To check your application email - applications@edbro.co.uk

NOTES

1. This cylinder is for lifting purposes only and side load conditions should be avoided
2. Cylinder is painted in primer paint to RAL5013
3. Refer to www.edbro.com for;-
   - Bracket details
   - Installation instructions that must be observed
   - Correct oil selection
   - An explanation of tipping capacity

***Includes 10mm Pull Out. All Stages Chrome Plated**

Edbro
Member of JOST-World

JOST UK Ltd
Edbro House, Nelson Street, Bolton, England, BL3 2JJ
Tel +44 (0) 1204 528888 Fax +44 (0) 1204 531957
Email: sales@edbro.com Web: www.edbro.com

Technical Specifications are subject to change without notice
Date Created/Updated: 25 April 2016
Refer www.edbro.com to confirm latest specification
All dimensions are in 'mm', unless otherwise stated

Cylinder Outline Drawing

CS10EE302159A200

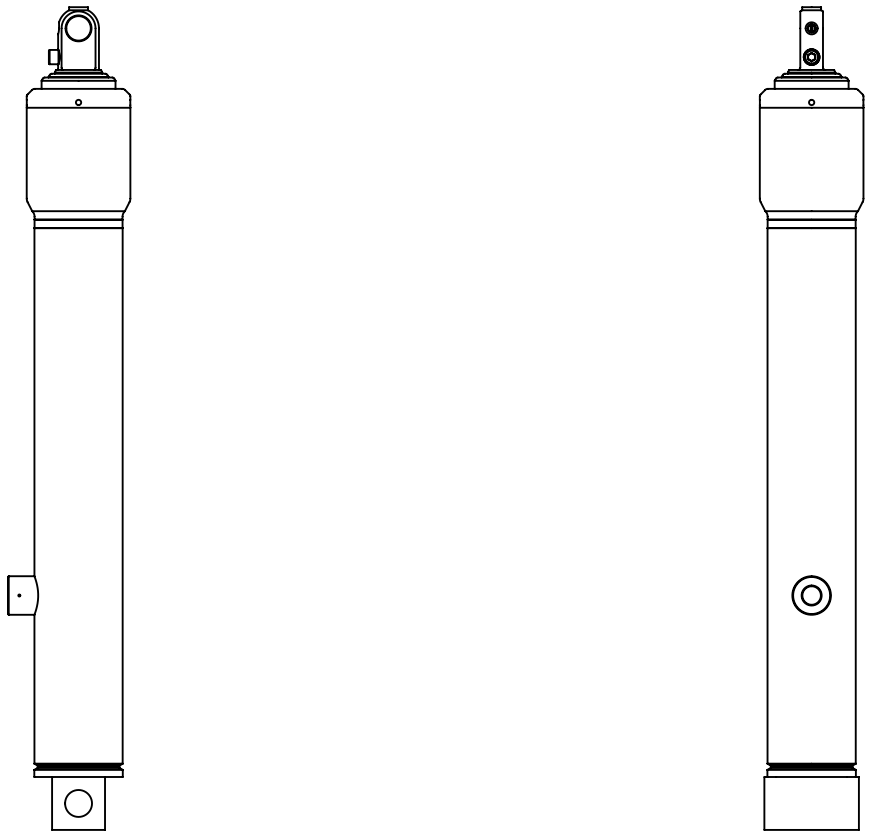

CS10EE302159A200

Edbro plc
Nelson Street, Bolton, Lancashire BL3 2JJ UK
Tel +44 (0) 1204 528888 Fax +44 (0) 1204 531957
Email: postmaster@edbro.com Web: www.edbro.com

SETTING THE INDUSTRY STANDARD

Technical Specifications are subject to change without notice

Date Created/Updated: 25 April 2016 11:03:10

Scale: 1:10

Cylinder 3 stage front end with outer cover

CS1000303209A102

****ALLOW 50mm TO REMOVE CAP FOR SERVICING**

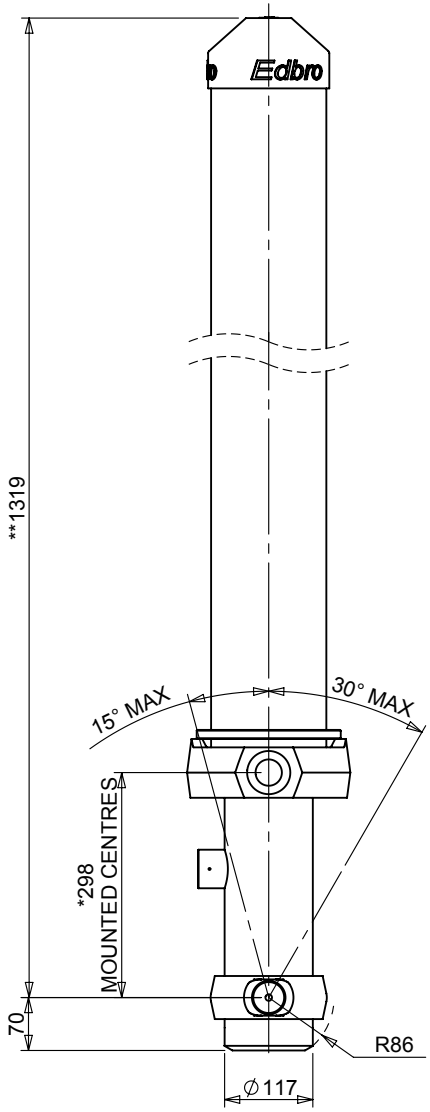

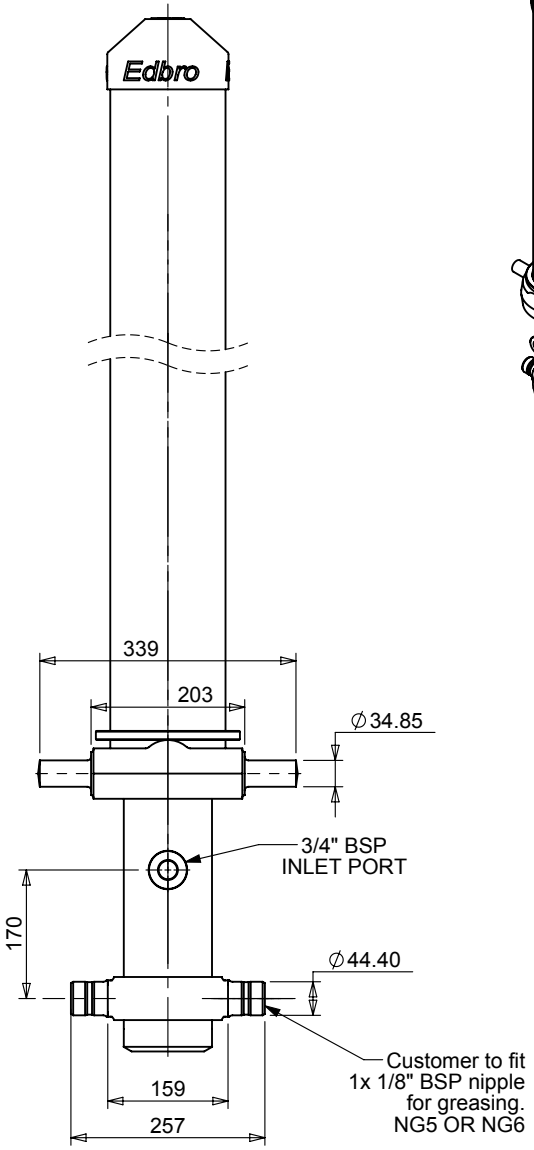

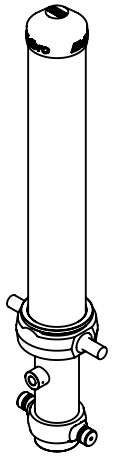

***Includes 10mm Pull Out. All Stages Chrome Plated**

SPECIFICATION		TIPPING CAPACITY : SEE BELOW***		
Stage	Diameter	Length	Stroke	Swept Volume
-	-	-	-	-
-	-	-	-	-
OUTER COVER	152	970	-	-
0	117	1251	-	-
1	98	1240	1060	8.0
2	79	1240	1072	5.3
3	63	1240	1077	3.4
		Total (+5/-10)	3209	16.7
Final stroke reduced by	0	Priming Volume		3
Cylinder Mass (kg)	89	Total Volume (Litres)		19.7
Maximum Pressure (Bar)	150	Max. first stage thrust		225 kN

***TIPPING CAPACITY AT WORKING PRESSURE

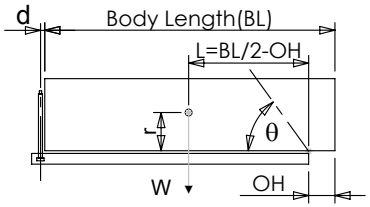

BODY LENGTH (BL)						OH
8500		9000		9500		
51	50°	48	47°	46	44°	150
55	52°	52	49°	49	46°	450
61	54°	56	51°	53	48°	750

Tipping angle (θ)

Body + payload mass,W (tonne)

d = 0; r = 900; Working Pressure 135 bar

For guidance only;
Higher working pressures and tipping capacities may be possible.
To check your application email - applications@edbro.co.uk

NOTES

1. This cylinder is for lifting purposes only and side load conditions should be avoided
2. Cylinder is painted in primer paint to RAL5013
3. Refer to www.edbro.com for;-
   - Bracket details
   - Installation instructions that must be observed
   - Correct oil selection
   - An explanation of tipping capacity

Edbro
Member of JOST-World

JOST UK Ltd
Edbro House, Nelson Street, Bolton, England, BL3 2JJ
Tel +44 (0) 1204 528888 Fax +44 (0) 1204 531957
Email: sales@edbro.com Web: www.edbro.com

Technical Specifications are subject to change without notice
Date Created/Updated: 02 August 2018
Refer www.edbro.com to confirm latest specification
All dimensions are in 'mm', unless otherwise stated

Cylinder Outline Drawing

CS1000303209A102

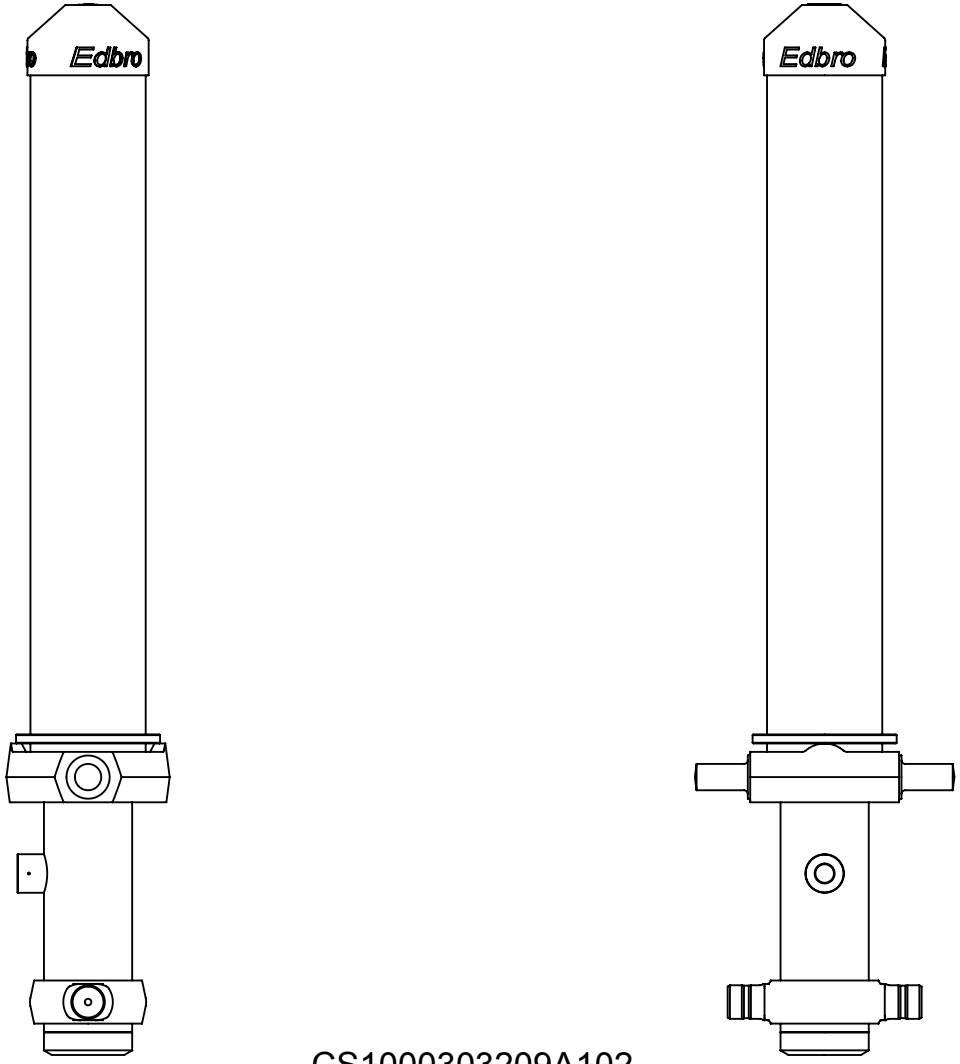

CS1000303209A102

Edbro plc
Nelson Street, Bolton, Lancashire BL3 2JJ UK
Tel +44 (0) 1204 528888 Fax +44 (0) 1204 531957
Email: postmaster@edbro.com Web: www.edbro.com

SETTING THE INDUSTRY STANDARD

Technical Specifications are subject to change without notice

Date Created/Updated: 02 August 2018 11:15:54

Scale: 1:10

Cylinder 3 stage front end with outer cover

CS1000303659A102

****ALLOW 50mm TO REMOVE CAP FOR SERVICING**

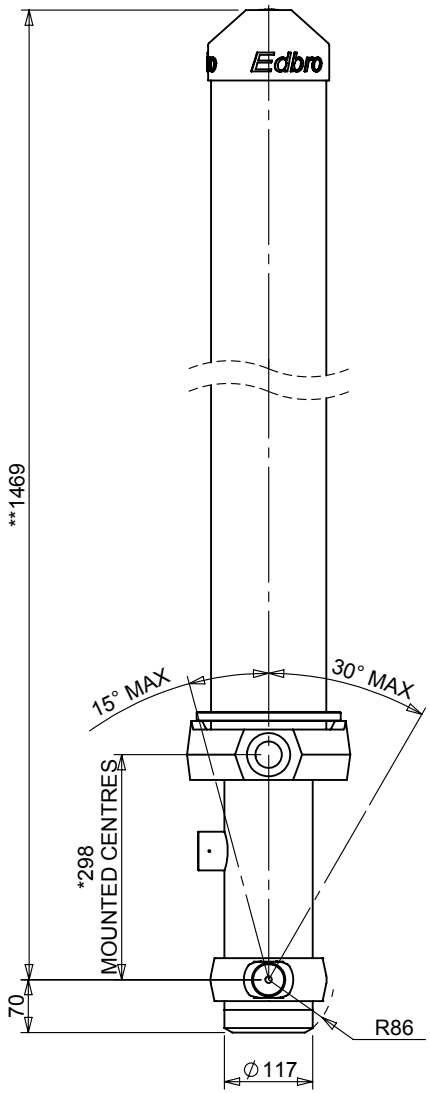

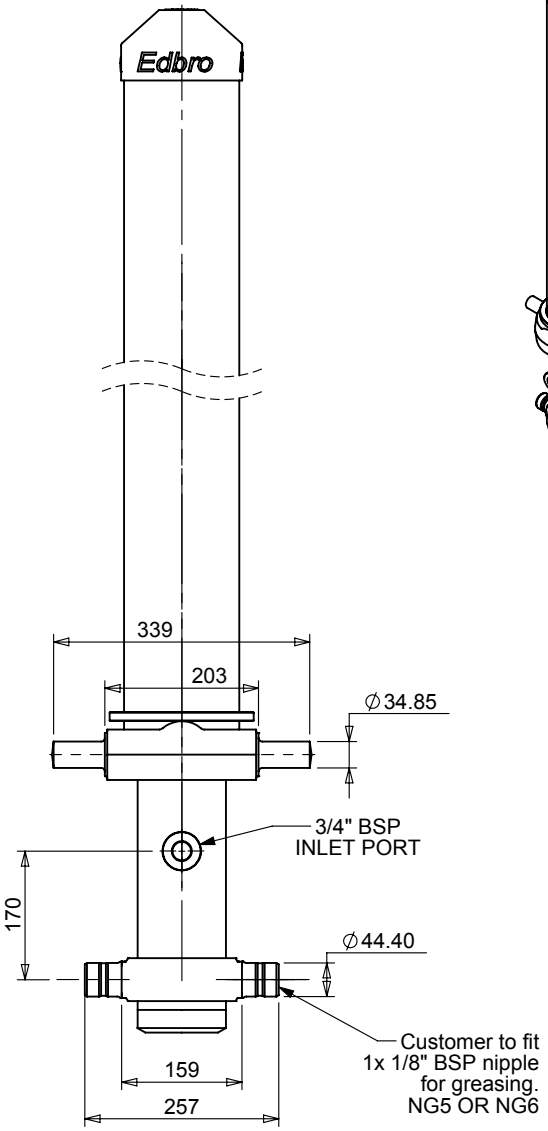

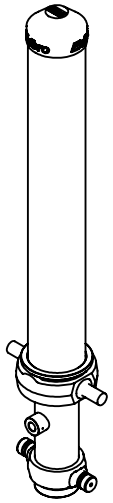

***Includes 10mm Pull Out. All Stages Chrome Plated**

SPECIFICATION		TIPPING CAPACITY : SEE BELOW***		
Stage	Diameter	Length	Stroke	Swept Volume
-	-	-	-	-
-	-	-	-	-
OUTER COVER	152	1120	-	-
0	117	1400	-	-
1	98	1390	1209.50	9.1
2	79	1390	1222	6.0
3	63	1390	1227	3.8
		Total (+5/-10)	3658.5	18.9
Final stroke reduced by	0	Priming Volume		4
Cylinder Mass (kg)	96	Total Volume (Litres)		22.9
Maximum Pressure (Bar)	150	Max. first stage thrust		225 kN

***TIPPING CAPACITY AT WORKING PRESSURE

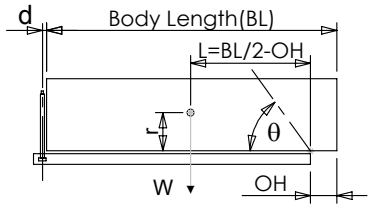

BODY LENGTH (BL)						OH
8500		9000		9500		
51	50°	48	47°	46	44°	150
55	52°	52	49°	49	46°	450
61	54°	56	51°	53	48°	750

Tipping angle (θ)

Body + payload mass,W (tonne)

d = 0; r = 900; Working Pressure 135 bar

For guidance only;
Higher working pressures and tipping capacities may be possible.
To check your application email - applications@edbro.co.uk

NOTES

1. This cylinder is for lifting purposes only and side load conditions should be avoided
2. Cylinder is painted in primer paint to RAL5013
3. Refer to www.edbro.com for;-
   - Bracket details
   - Installation instructions that must be observed
   - Correct oil selection
   - An explanation of tipping capacity

Edbro
Member of JOST-World

JOST UK Ltd
Edbro House, Nelson Street, Bolton, England, BL3 2JJ
Tel +44 (0) 1204 528888 Fax +44 (0) 1204 531957
Email: sales@edbro.com Web: www.edbro.com

Technical Specifications are subject to change without notice
Date Created/Updated: 23 October 2019
Refer www.edbro.com to confirm latest specification
All dimensions are in 'mm', unless otherwise stated

Cylinder Outline Drawing

CS1000303659A102

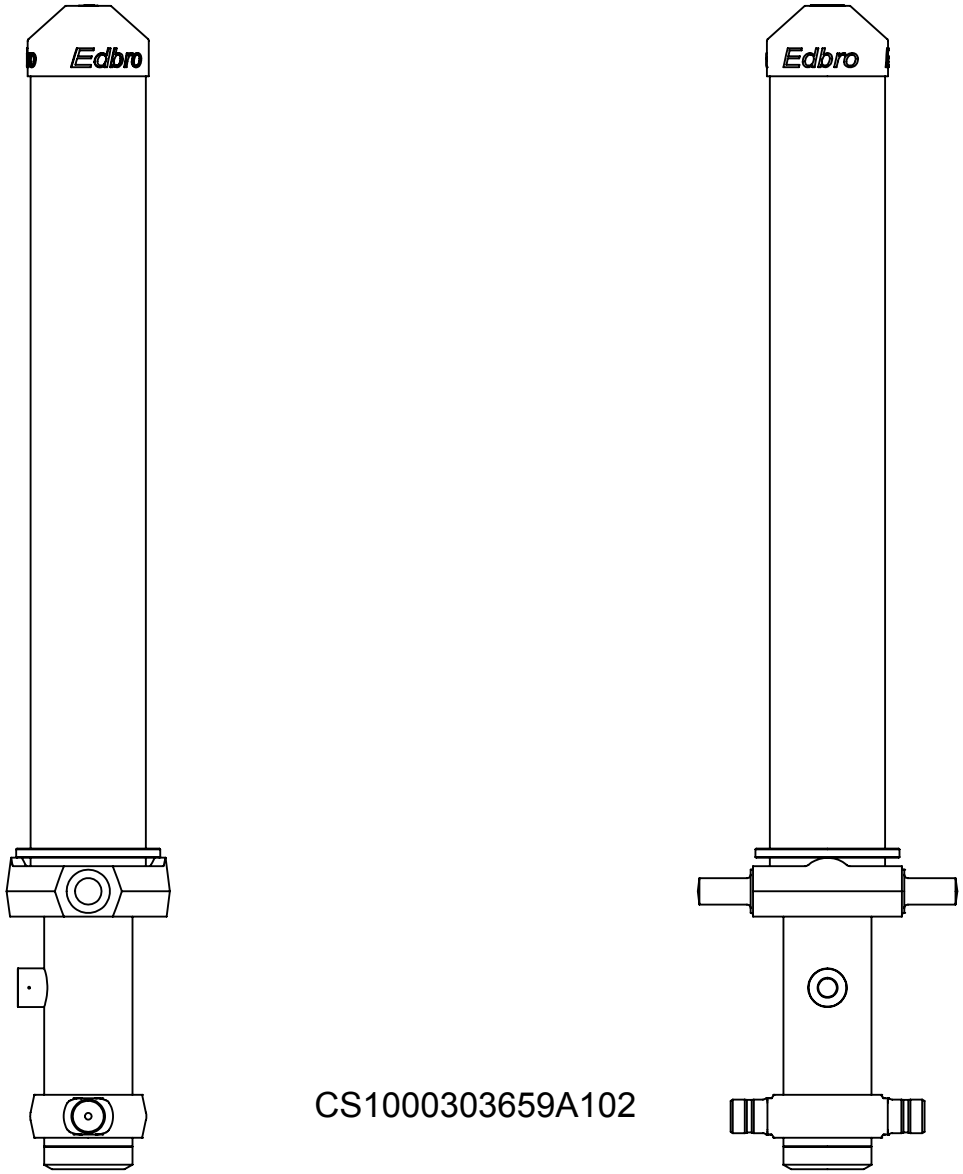

CS1000303659A102

Edbro plc
Nelson Street, Bolton, Lancashire BL3 2JJ UK
Tel +44 (0) 1204 528888 Fax +44 (0) 1204 531957
Email: postmaster@edbro.com Web: www.edbro.com

SETTING THE INDUSTRY STANDARD

Technical Specifications are subject to change without notice

Date Created/Updated: 23 October 2019 10:35:08

Scale: 1:10

Cylinder 3 stage front end with plain eye

CS11EE302144A200

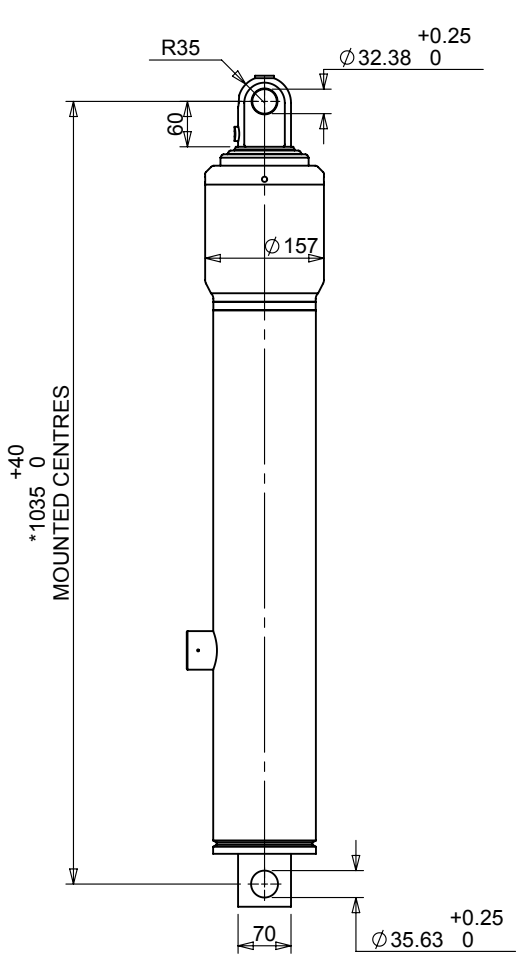

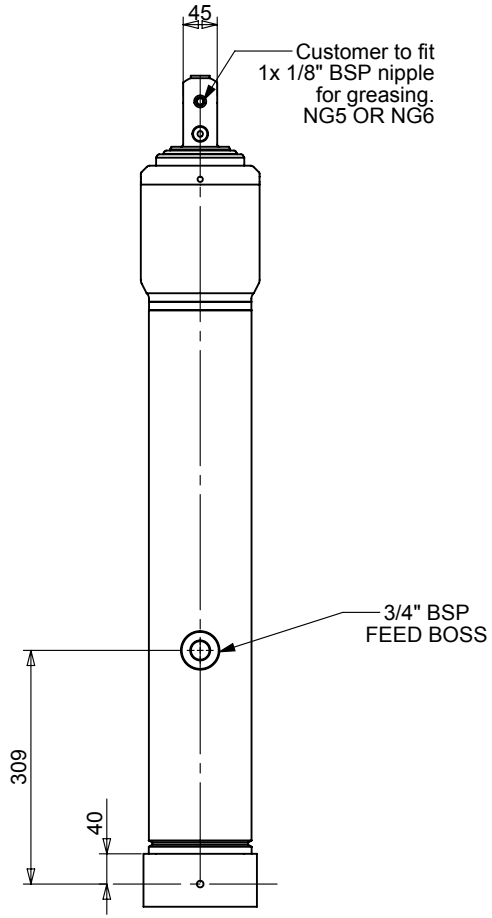

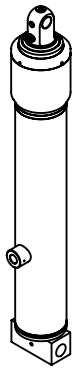

***Includes 10mm Pull Out. All Stages Chrome Plated**

SPECIFICATION — TIPPING CAPACITY : SEE BELOW***

Stage	Diameter	Length	Stroke	Swept Volume
-	-	-	-	
-	-	-	-	
-	-	-	-	
0	136	870	-	-
1	117	890	705	7.6
2	98	890	717	5.4
3	79	890	722	3.5
		Total (+5/-10)	2144	16.5
Final stroke reduced by	0	Priming Volume		6
Cylinder Mass (kg)	61	Total Volume (Litres)		22.5
Maximum Pressure (Bar)	150	Max. first stage thrust		225 kN

***TIPPING CAPACITY AT WORKING PRESSURE

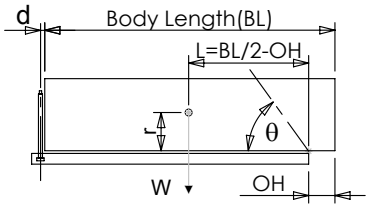

BODY LENGTH (BL)						OH
8500		9000		9500		
51	50°	48	47°	46	44°	150
55	52°	52	49°	49	46°	450
61	54°	56	51°	53	48°	750

Tipping angle (θ)

Body + payload mass,W (tonne)

d = 0; r = 900; Working Pressure 135 bar

For guidance only;
Higher working pressures and tipping capacities may be possible.
To check your application email - applications@edbro.co.uk

NOTES

1. This cylinder is for lifting purposes only and side load conditions should be avoided
2. Cylinder is painted in primer paint to RAL5013
3. Refer to www.edbro.com for;-
   - Bracket details
   - Installation instructions that must be observed
   - Correct oil selection
   - An explanation of tipping capacity

Edbro
Member of JOST-World

JOST UK Ltd
Edbro House, Nelson Street, Bolton, England, BL3 2JJ
Tel +44 (0) 1204 528888 Fax +44 (0) 1204 531957
Email: sales@edbro.com Web: www.edbro.com

Technical Specifications are subject to change without notice
Date Created/Updated: 21 April 2016
Refer www.edbro.com to confirm latest specification
All dimensions are in 'mm', unless otherwise stated

Cylinder Outline Drawing

CS11EE302144A200

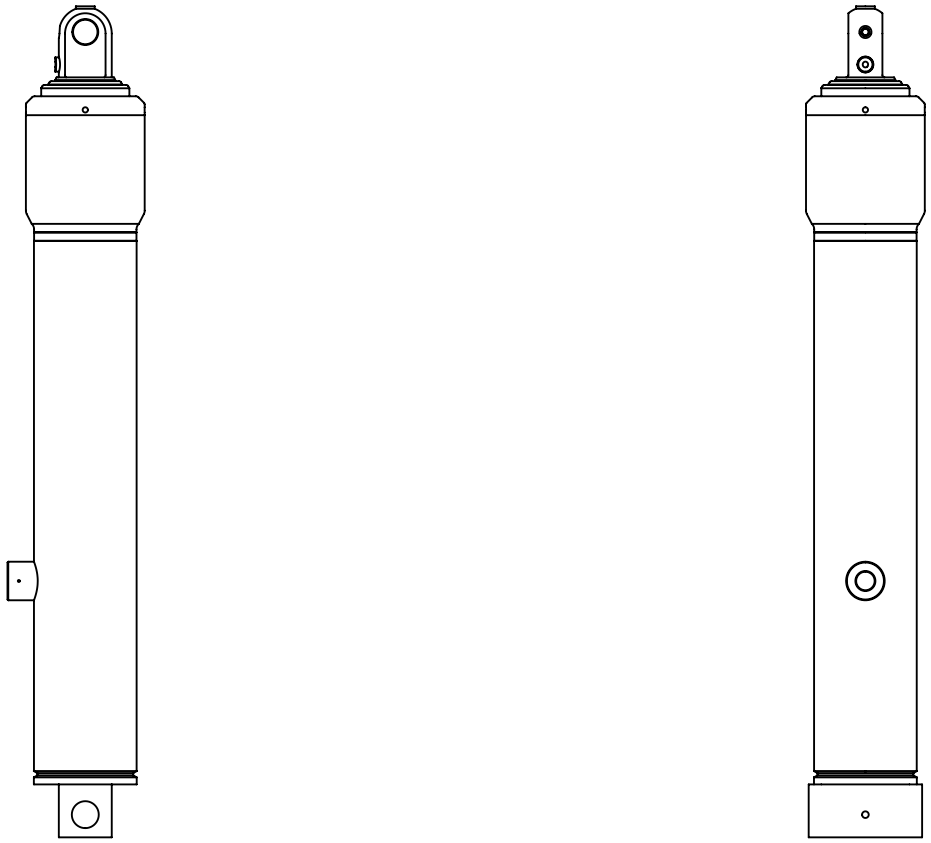

CS11EE302144A200

Edbro plc
Nelson Street, Bolton, Lancashire BL3 2JJ UK
Tel +44 (0) 1204 528888 Fax +44 (0) 1204 531957
Email: postmaster@edbro.com Web: www.edbro.com

SETTING THE INDUSTRY STANDARD

Technical Specifications are subject to change without notice

Date Created/Updated: 21 April 2016 16:38:11

Scale: 1:10

Cylinder 4 stage front end with plain eye

CS11EE402971A102

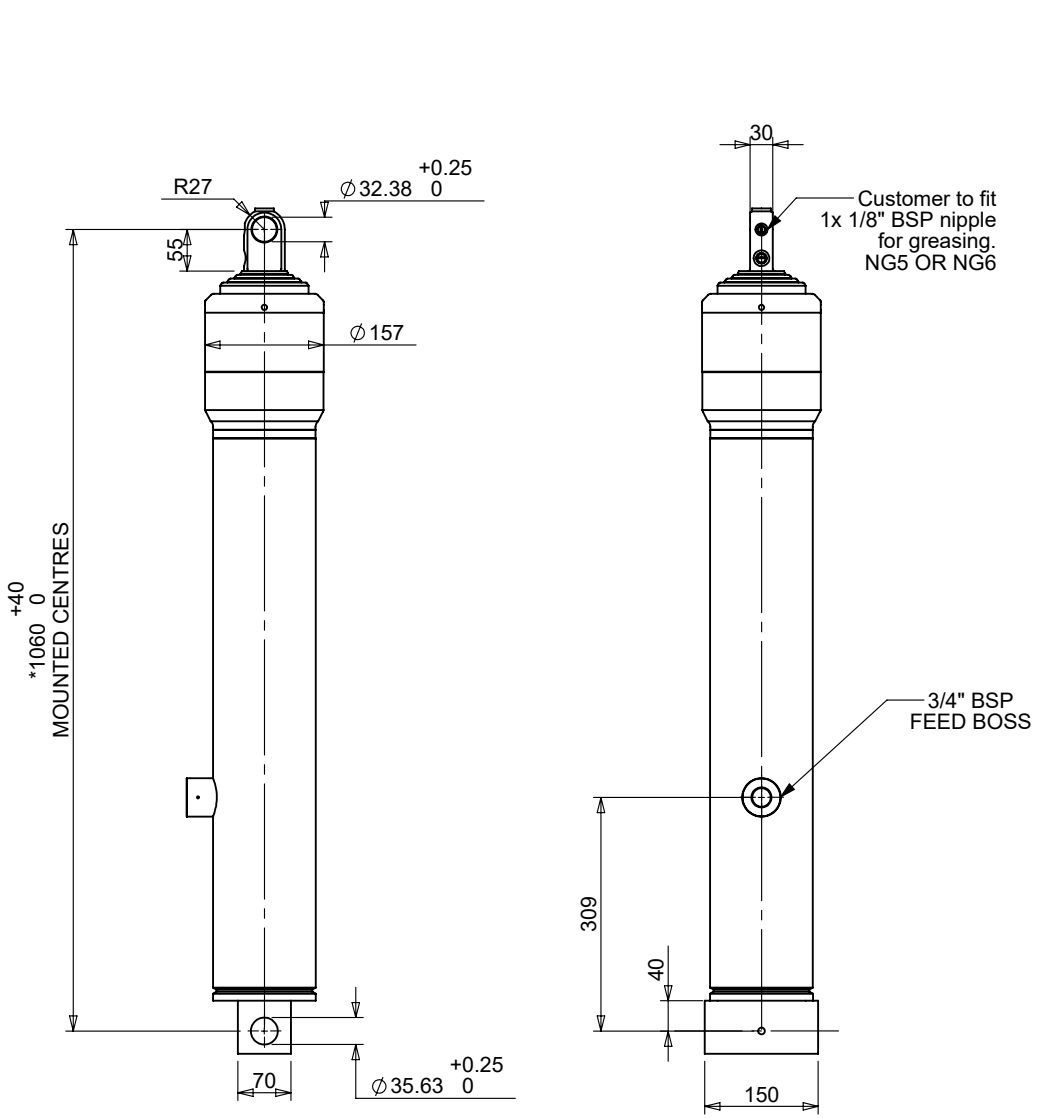

***Includes 10mm Pull Out. All Stages Chrome Plated**

SPECIFICATION		TIPPING CAPACITY : SEE BELOW***		
Stage	Diameter	Length	Stroke	Swept Volume
-	-	-	-	-
-	-	-	-	-
0	136	895	-	-
1	117	915	730	7.8
2	98	915	742	5.6
3	79	915	747	3.7
4	63	915	752	2.3
		Total (+5/-10)	2971	19.4
Final stroke reduced by	0	Priming Volume		5.6
Cylinder Mass (kg)	67	Total Volume (Litres)		25
Maximum Pressure (Bar)	150	Max. first stage thrust		225 kN

***TIPPING CAPACITY AT WORKING PRESSURE

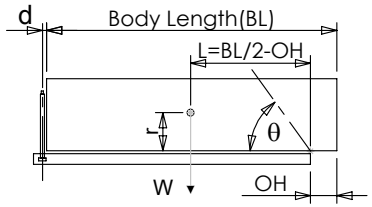

BODY LENGTH (BL)						OH
8500		9000		9500		
51	50°	48	47°	46	44°	150
55	52°	52	49°	49	46°	450
61	54°	56	51°	53	48°	750

Tipping angle (θ)

Body + payload mass,W (tonne)

d = 0; r = 900; Working Pressure 135 bar

For guidance only;
Higher working pressures and tipping capacities may be possible.
To check your application email - applications@edbro.co.uk

NOTES

1. This cylinder is for lifting purposes only and side load conditions should be avoided
2. Cylinder is painted in primer paint to RAL5013
3. Refer to www.edbro.com for;-
   - Bracket details
   - Installation instructions that must be observed
   - Correct oil selection
   - An explanation of tipping capacity

Edbro
Member of JOST-World

JOST UK Ltd
Edbro House, Nelson Street, Bolton, England, BL3 2JJ
Tel +44 (0) 1204 528888 Fax +44 (0) 1204 531957
Email: sales@edbro.com Web: www.edbro.com

Technical Specifications are subject to change without notice
Date Created/Updated: 14 June 2019
Refer www.edbro.com to confirm latest specification
All dimensions are in 'mm', unless otherwise stated

Transpecs
QUALITY ON THE MOVE
www.transpecs.co.nz

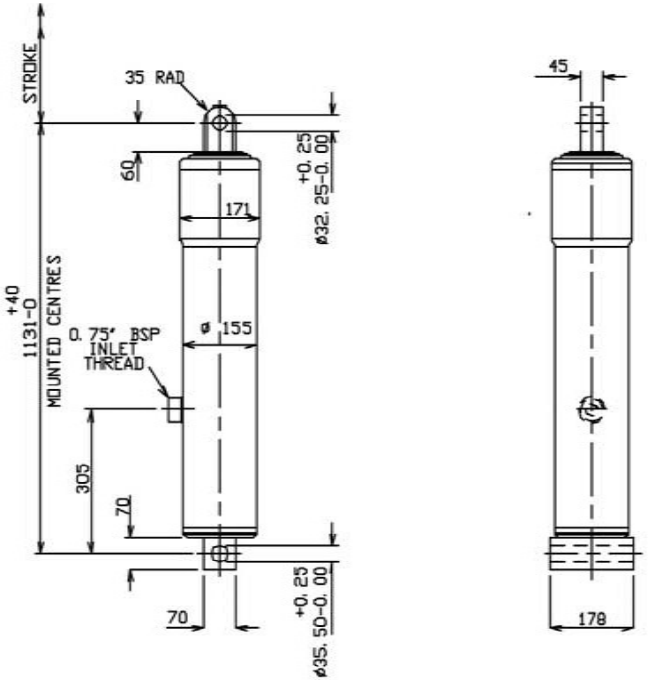

BODY AND PAYLOAD FOR TWIN RAMS @ 150 BAR

PIVOT LENGTHS SHOWN GIVE 48° TIP

BODY LENGTH

6000	6250	6500	6750	7000	7250	7500	O/HANG
32	30	29	28	26	25	24	200
34	32	30	29	27	26	25	300
35	33	31	30	28	27	26	400
35	35	33	31	29	28	27	500

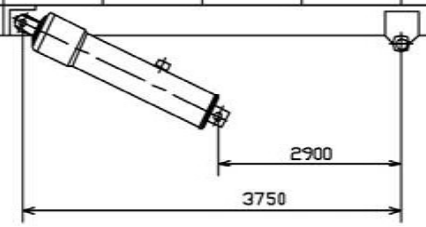

* Intermediate tubes hard chromed.

STAGES	3
SWEPT VOLUME	26 l
TOTAL STROKE	2419 MM
OPERATING PRESSURE	135 bar
MAXIMUM PRESSURE	150 bar
CYLINDER WEIGHT DRY	83 kg

DIMENSIONS IN MILLIMETRES UNLESS STATED OTHERWISE

SEAL KIT KCS13/3

MAX LOAD	35 TONNE

CYLINDER ASSEMBLY	CS13EE241

Edbro
SETTING THE INDUSTRY STANDARD

Transpecs
QUALITY ON THE MOVE
www.transpecs.co.nz

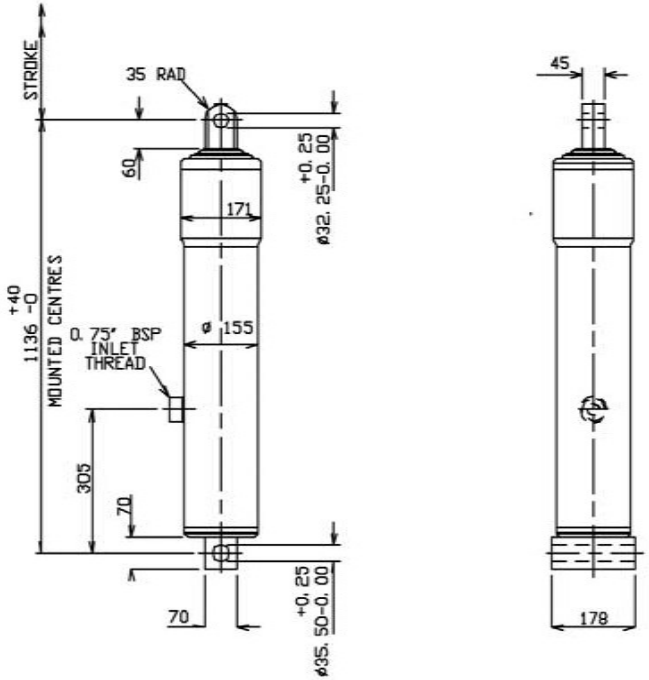

BODY AND PAYLOAD FOR TWIN RAMS @ 150 BAR

PIVOT LENGTHS SHOWN GIVE 48° TIP

BODY LENGTH

6500mm	6750mm	7000mm	7250mm	7500mm	7750mm	8000mm	O/HANG
29	28	26	25	24	23	22	200
30	29	27	26	25	24	23	300
31	30	28	27	26	25	24	400
33	31	29	28	27	25	25	500

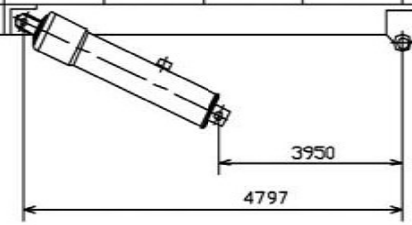

* Intermediate tubes hard chromed.

STAGES	4
SWEPT VOLUME	27 l
TOTAL STROKE	3241 MM
OPERATING PRESSURE	135 bar
MAXIMUM PRESSURE	150 bar
CYLINDER WEIGHT DRY	89 kg

DIMENSIONS IN MILLIMETRES UNLESS STATED OTHERWISE

SEAL KIT KCS13/4

MAX LOAD	33 TONNE

CYLINDER ASSEMBLY	CS13EE324

Edbro
SETTING THE INDUSTRY STANDARD

Cylinder 4 stage front end with plain eye

CS13EE403641A200

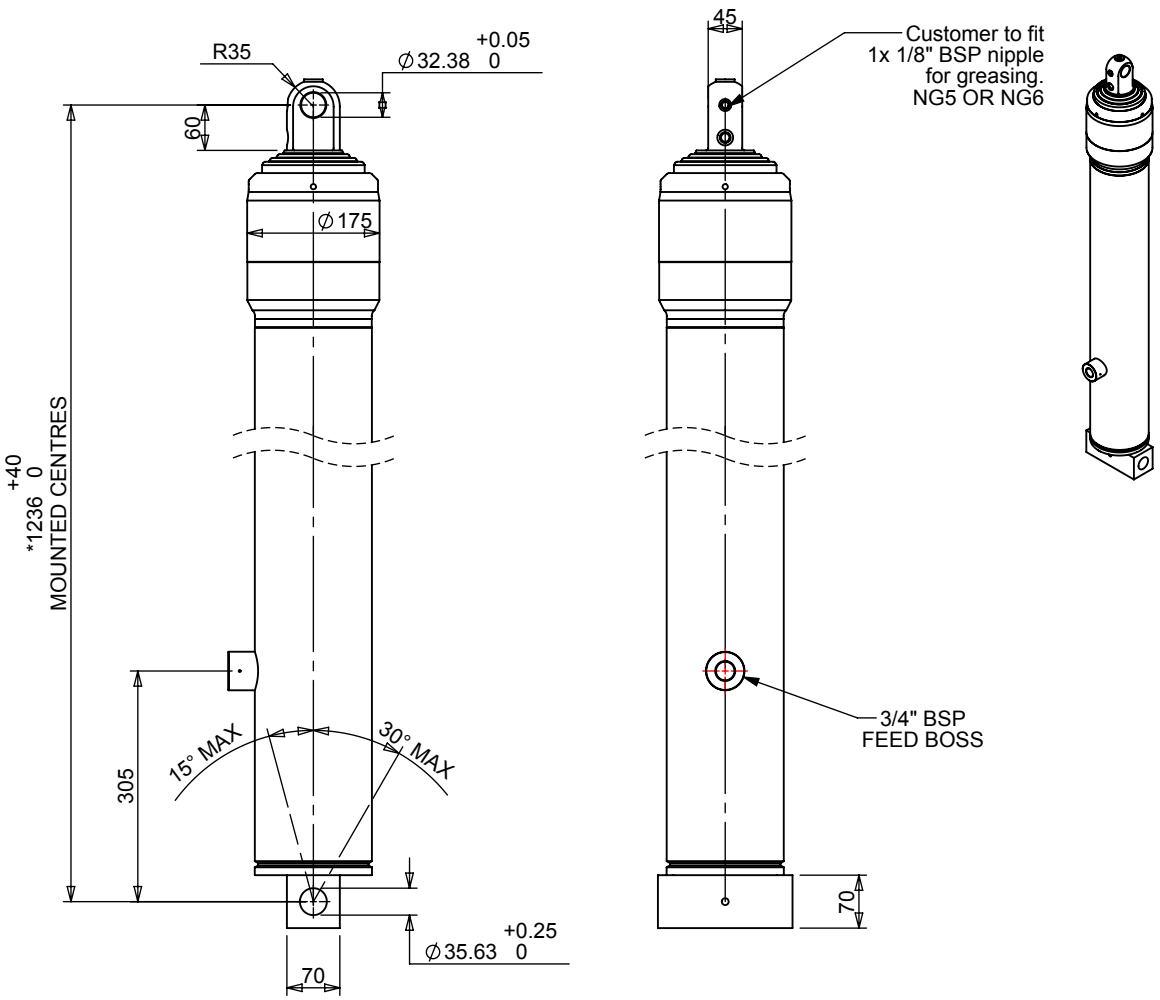

***Includes 10mm Pull Out. All Stages Chrome Plated**

SPECIFICATION		TIPPING CAPACITY : SEE BELOW***		
Stage	Diameter	Length	Stroke	Swept Volume
-	-	-	-	-
-	-	-	-	-
0	155	1070	-	-
1	136	1090	890	12.9
2	117	1090	912	9.8
3	98	1090	917	6.9
4	79	1090	922	4.5
		Total (+5/-10)	3641	34.1
Final stroke reduced by	0	Priming Volume		9.5
Cylinder Mass (kg)	97	Total Volume (Litres)		43.6
Maximum Pressure (Bar)	150	Max. first stage thrust		225 kN

***TIPPING CAPACITY AT WORKING PRESSURE

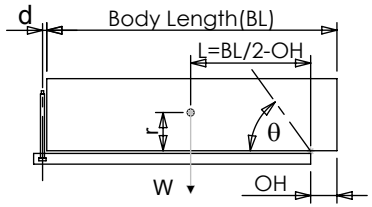

BODY LENGTH (BL)						OH
8500		9000		9500		
51	50°	48	47°	46	44°	150
55	52°	52	49°	49	46°	450
61	54°	56	51°	53	48°	750

Tipping angle (θ)

Body + payload mass,W (tonne)

d = 0; r = 900; Working Pressure 135 bar

For guidance only;
Higher working pressures and tipping capacities may be possible.
To check your application email - applications@edbro.co.uk

NOTES

1. This cylinder is for lifting purposes only and side load conditions should be avoided
2. Cylinder is painted in primer paint to RAL5013
3. Refer to www.edbro.com for;-
   - Bracket details
   - Installation instructions that must be observed
   - Correct oil selection
   - An explanation of tipping capacity

JOST UK Ltd
Edbro House, Nelson Street, Bolton, England, BL3 2JJ
Tel +44 (0) 1204 528888 Fax +44 (0) 1204 531957
Email: sales@edbro.com Web: www.edbro.com

Technical Specifications are subject to change without notice
Date Created/Updated: 17 October 2018
Refer www.edbro.com to confirm latest specification
All dimensions are in 'mm', unless otherwise stated

Transpecs
QUALITY ON THE MOVE
www.transpecs.co.nz

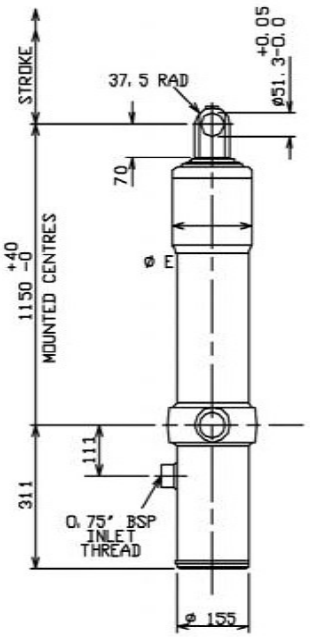

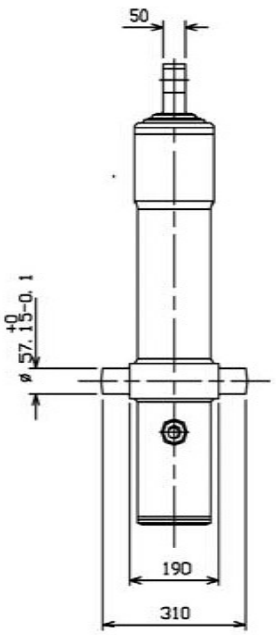

RB KIT COMPONENTS

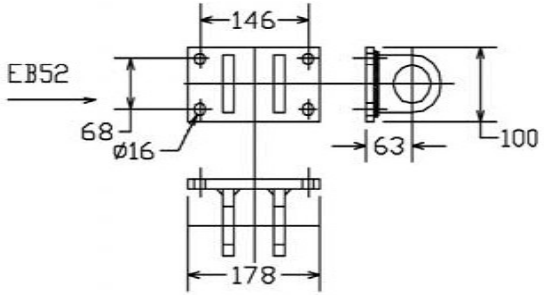

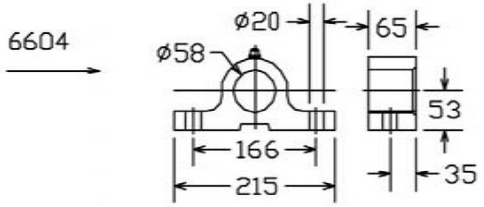

BODY LENGTH

6200		6400		6600		6800		O/HANG
angle	tonne							
51°	24	49°	23	47°	23	45°	22	200
52°	24	50°	24	48°	24	47°	23	300
53°	26	51°	25	49°	24	48°	24	400

BOTTOM PIVOT 600MM FROM FOB

NOTE : INTERMEDIATE TUBES HARDCHROMED

STAGES	4
SWEPT VOLUME	44 l
TOTAL STROKE	4641 MM
OPERATING PRESSURE	135 bar
MAXIMUM PRESSURE	150 bar
CYLINDER WEIGHT DRY	119 kg

DIMENSIONS IN MILLIMETRES UNLESS STATED OTHERWISE

SEAL KIT KCS13/4	MAX LOAD	24 TONNE +

CYLINDER ASSEMBLY	CS13OE464H

Edbro
SETTING THE INDUSTRY STANDARD

Transpecs
QUALITY ON THE MOVE
www.transpecs.co.nz

CS13OE504H

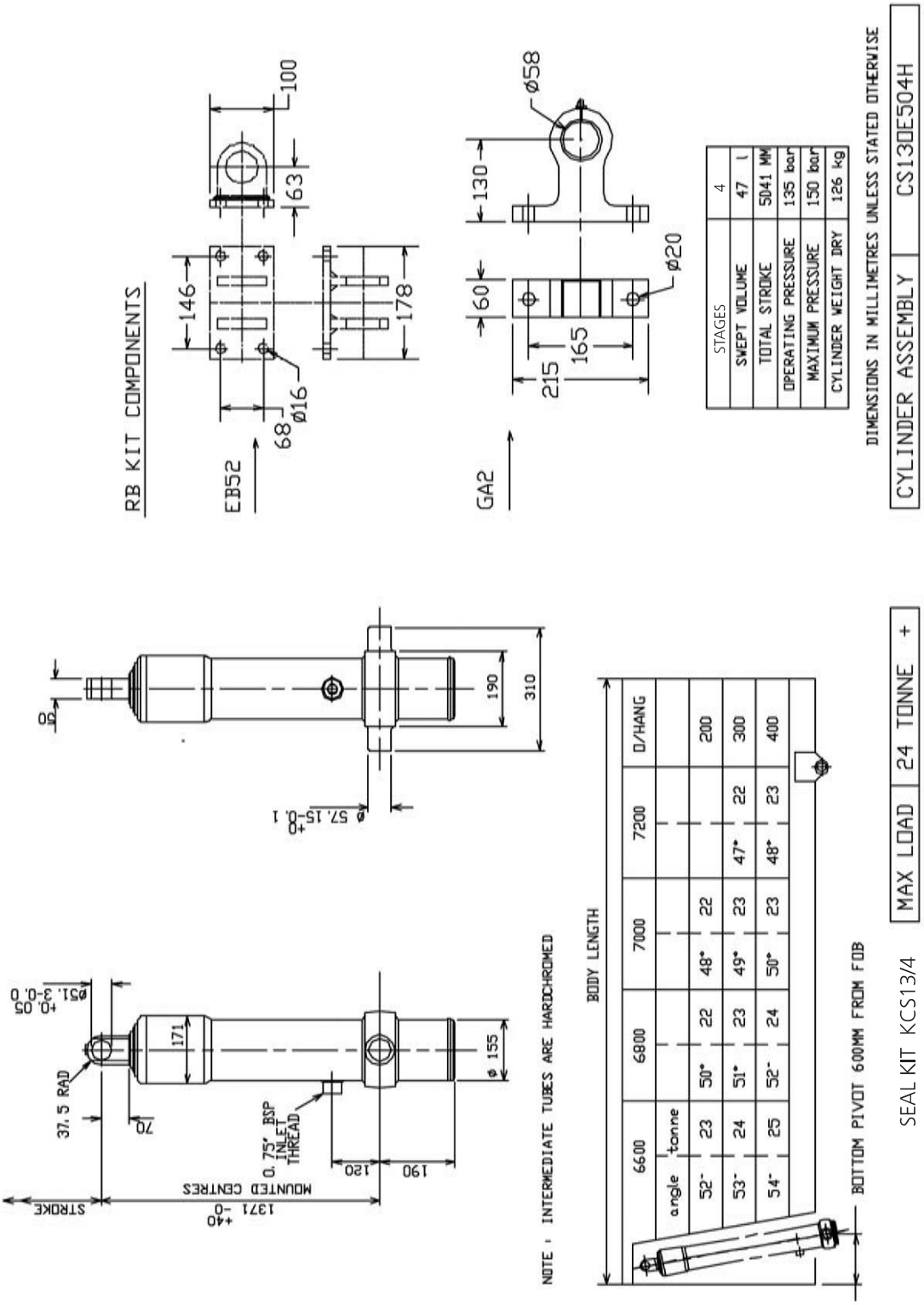

Edbro
SETTING THE INDUSTRY STANDARD

Transpecs
QUALITY ON THE MOVE
www.transpecs.co.nz

CS15OE477H

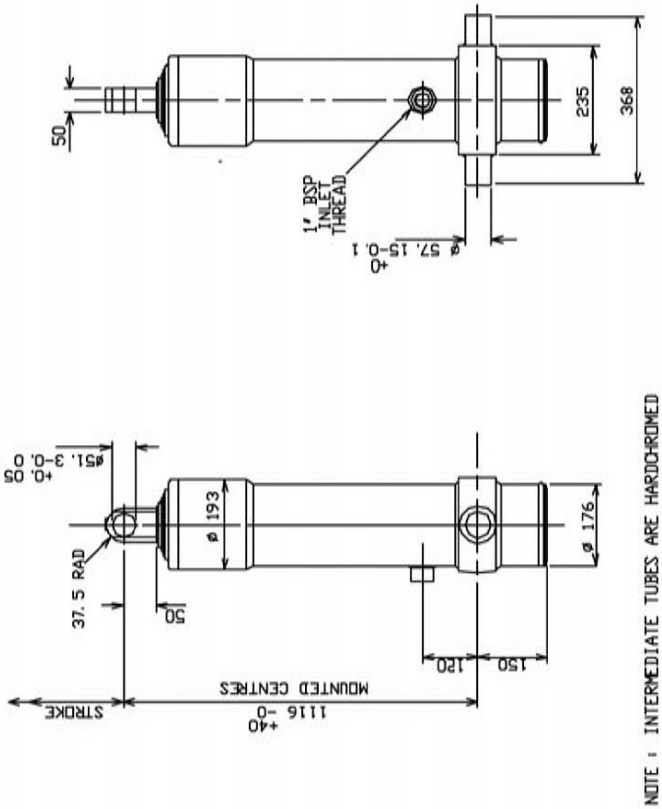

NOTE : INTERMEDIATE TUBES ARE HARDCHROMED

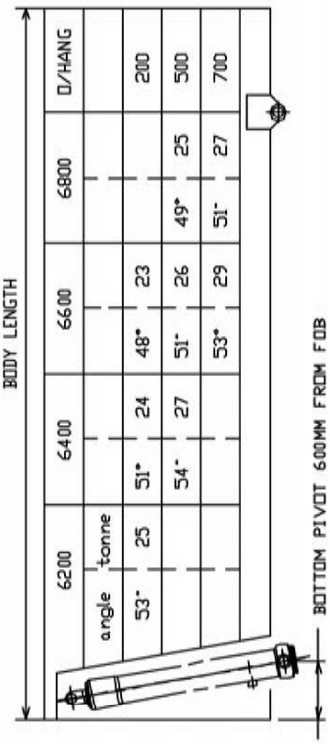

angle	tonne	6200	6400	6600	6800	D/HANG
53°	25	51°	24	48°	23	200
		54°	27	51°	26	25	500
				53°	29	49°	27	51°	700

SEAL KIT KCS15/5

MAX LOAD	30 TONNE

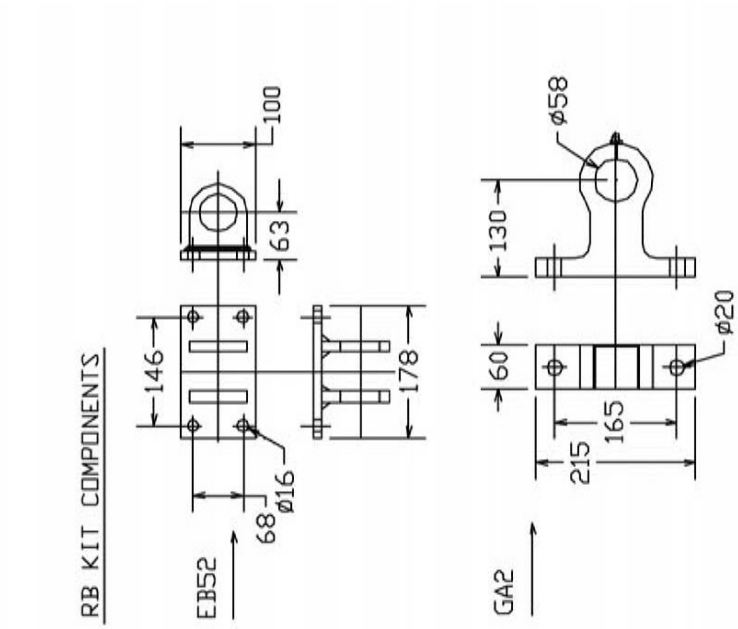

STAGES	5
SWEPT VOLUME	54 l
TOTAL STROKE	4778 MM
OPERATING PRESSURE	135 bar
MAXIMUM PRESSURE	150 bar
CYLINDER WEIGHT DRY	145 kg

DIMENSIONS IN MILLIMETRES UNLESS STATED OTHERWISE

CYLINDER ASSEMBLY	CS15OE477H

Edbro
SETTING THE INDUSTRY STANDARD

Cylinder 4 stage front end with plain eye

CS150E405406A518C

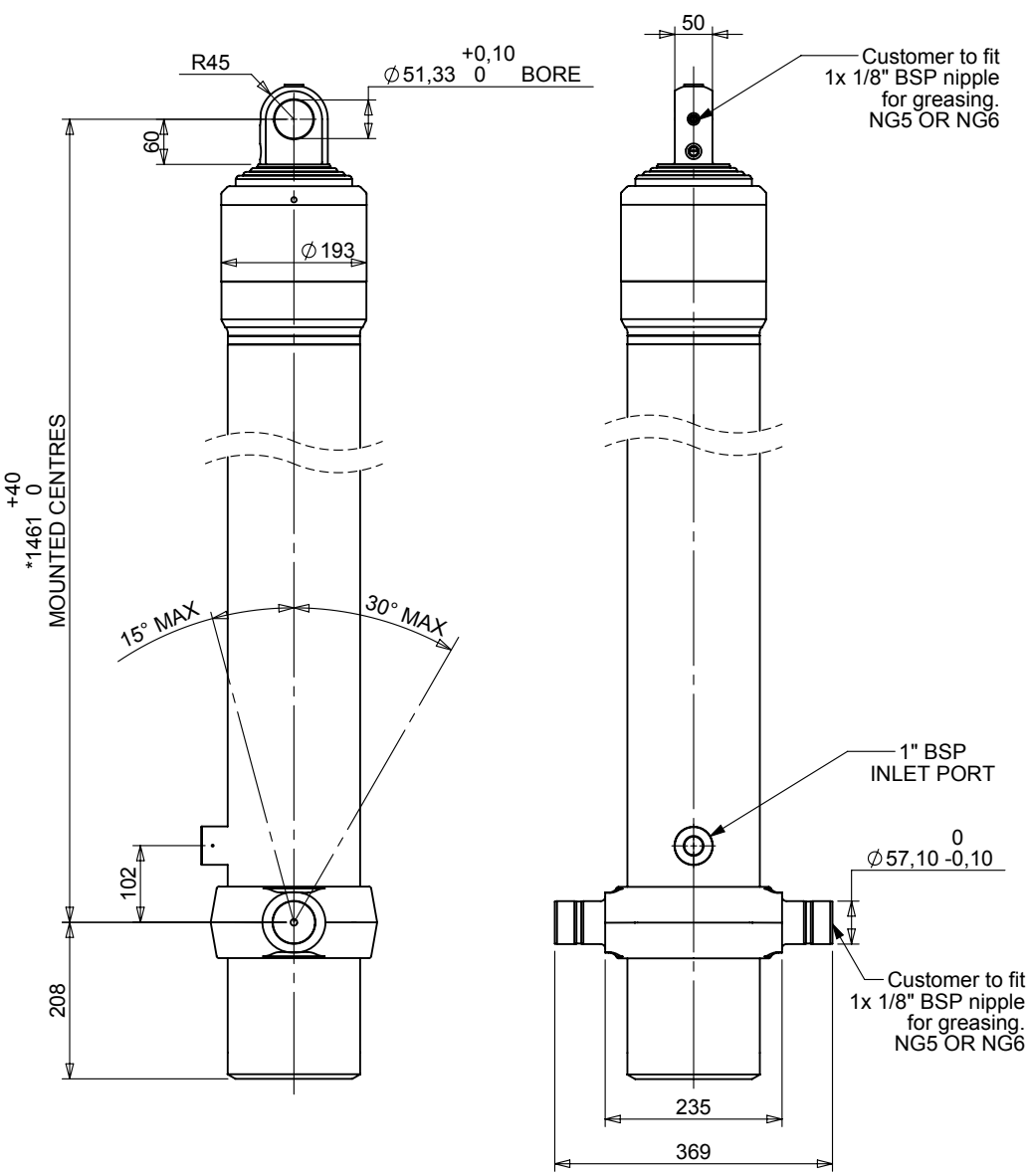

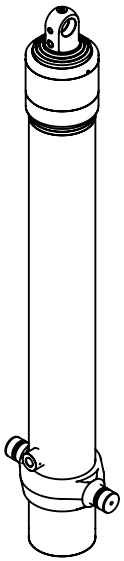

SPECIFICATION		TIPPING CAPACITY : SEE BELOW***		
Stage	Diameter	Length	Stroke	Swept Volume
-	-	-	-	-
-	-	-	-	-
0	176	1555	-	-
1	155	1540	1330	25
2	136	1540	1347	20
3	117	1540	1362	15
4	98	1540	1367	10
		Total (+5/-10)	5406	70
Final stroke reduced by	0	Priming Volume		18
Cylinder Mass (kg)	171	Total Volume (Litres)		88
Maximum Pressure (Bar)	150	Max. first stage thrust		225 kN

***TIPPING CAPACITY AT WORKING PRESSURE

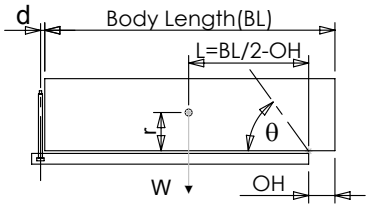

BODY LENGTH (BL)						OH
7250		7750		8250		
29	46°	28	42°	27	40°	150
32	48°	30	44°	28	41°	450
35	50°	33	46°	31	43°	750

Tipping angle (θ)

Body + payload mass,W (tonne)

d = 0; r = 900; Working Pressure 138 bar

For guidance only;
Higher working pressures and tipping capacities may be possible.
To check your application email - applications@edbro.co.uk

NOTES

1. This cylinder is for lifting purposes only and side load conditions should be avoided
2. Cylinder is painted in primer paint to RAL5013
3. Refer to www.edbro.com for;-
   - Bracket details
   - Installation instructions that must be observed
   - Correct oil selection
   - An explanation of tipping capacity

***Includes 9mm Pull Out. All stages chrome plated.**

JOST UK Ltd
Edbro House, Nelson Street, Bolton, England, BL3 2JJ
Tel +44 (0) 1204 528888 Fax +44 (0) 1204 531957
Email: sales-uk@edbro.com Web: www.edbro.com

Technical Specifications are subject to change without notice
Date Created/Updated: 16 May 2019
Refer www.edbro.com to confirm latest specification
All dimensions are in 'mm', unless otherwise stated

Cylinder Outline Drawing

CS150E405406A518C

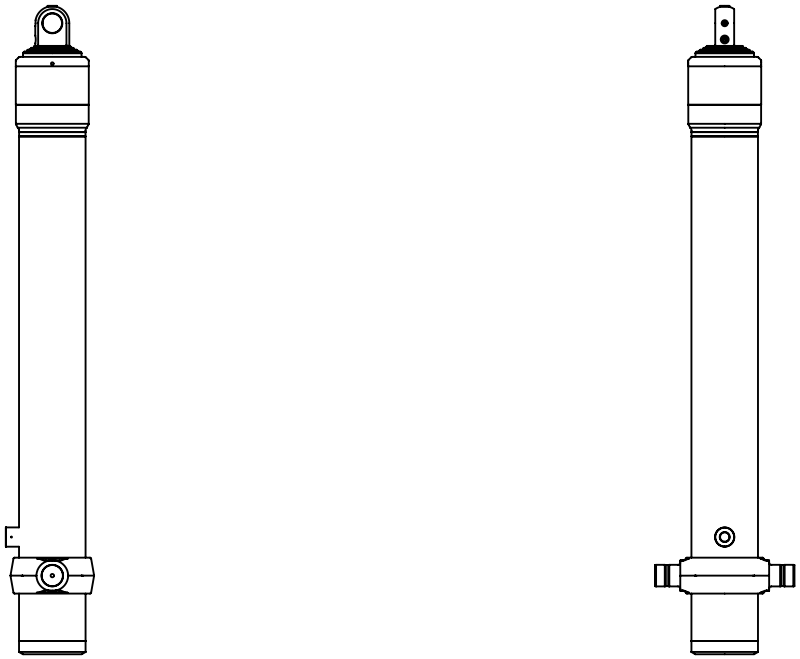

CS150E405406A518C

Edbro plc
Nelson Street, Bolton, Lancashire BL3 2JJ UK
Tel +44 (0) 1204 528888 Fax +44 (0) 1204 531957
Email: postmaster@edbro.com Web: www.edbro.com

Technical Specifications are subject to change without notice

Date Created/Updated: 16 May 2019 09:40:18

Scale: 1:20

Cylinder 4 stage front end with outer cover

CX1000303209A102

****ALLOW 50mm TO REMOVE CAP FOR SERVICING**

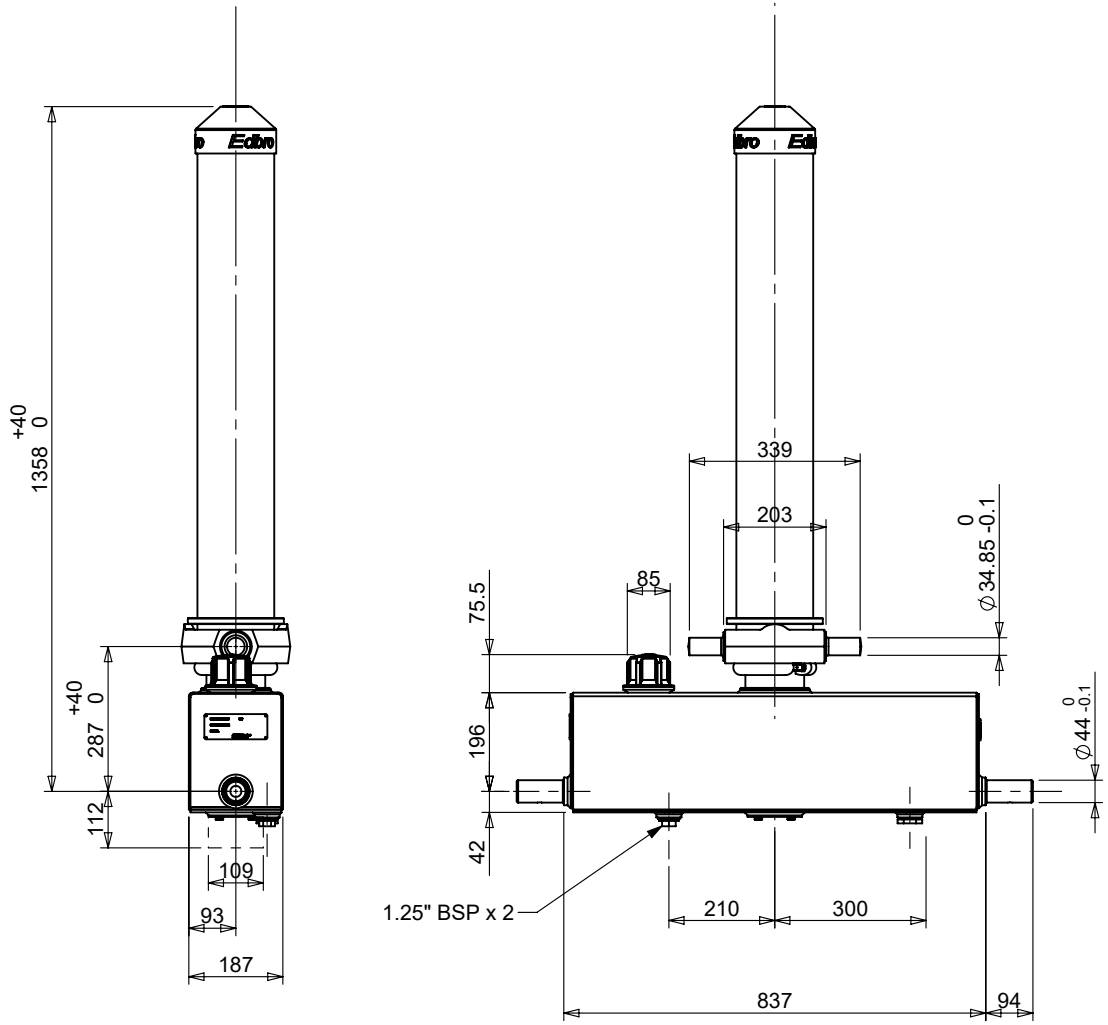

***Includes 10mm Pull Out.**
All Stages Chrome Plated

SPECIFICATION — TIPPING CAPACITY : 13-14 TONNES***

Stage	Diameter	Length	Stroke	Swept Volume
OUTER COVER	152	1020	-	-
0	117	1220	-	-
1	98	1240	1060	8
2	79	1240	1072	5
4	63	1240	1077	3
		Total (+5/-10)	3209	16
Final stroke reduced by	0	Priming Volume		4
Cylinder Mass (Kg)		Total Volume (Litres)		20
Maximum Pressure (Bar)	175	Oil Tank Capacity (L)		25

***TIPPING CAPACITY AT WORKING PRESSURE

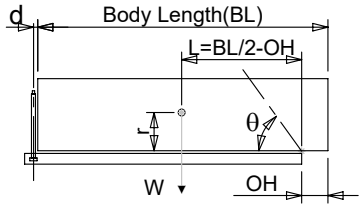

BODY LENGTH (BL)						OH
4000		4250		4500		
14	50°	13	47°	13	44°	150
14	55°	14	51°	14	48°	450
				14	52°	750

Tipping angle (θ)
Body + payload mass,W (tonne)

d = 0; r = 900; Working Pressure 150 bar

For guidance only;
Higher working pressures and tipping capacities may be possible.
To check your application email - applications@edbro.co.uk

NOTES

1. This cylinder is for lifting purposes only and side load conditions should be avoided
2. Cylinder is painted in primer paint to RAL5013
3. Refer to www.edbro.com for;-
   - Bracket details
   - Installation instructions that must be observed
   - Correct oil selection
   - An explanation of tipping capacity

JOST UK Ltd
Edbro House, Nelson Street, Bolton, England, BL3 2JJ
Tel +44 (0) 1204 528888 Fax +44 (0) 1204 531957
Email: sales-uk@jost-world.com Web: www.edbro.com

Technical Specifications are subject to change without notice
Date Created/Updated: 04 April 2019
Refer www.edbro.com to confirm latest specification
All dimensions are in 'mm', unless otherwise stated

Cylinder Outline Drawing

CX1000303209A102

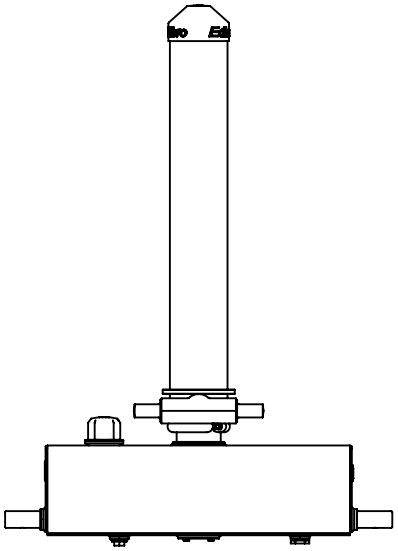

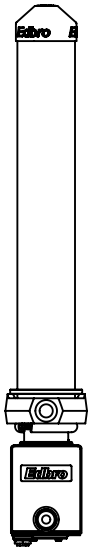

CX1000303209A102

Edbro plc
Nelson Street, Bolton, Lancashire BL3 2JJ UK
Tel +44 (0) 1204 528888 Fax +44 (0) 1204 531957
Email: postmaster@edbro.com Web: www.edbro.com

SETTING THE INDUSTRY STANDARD

Technical Specifications are subject to change without notice

Date Created/Updated: 04 April 2019

Scale: 1:20

Cylinder 3 stage front end with outer cover

CX1000303659A102

****ALLOW 50mm TO REMOVE CAP FOR SERVICING**

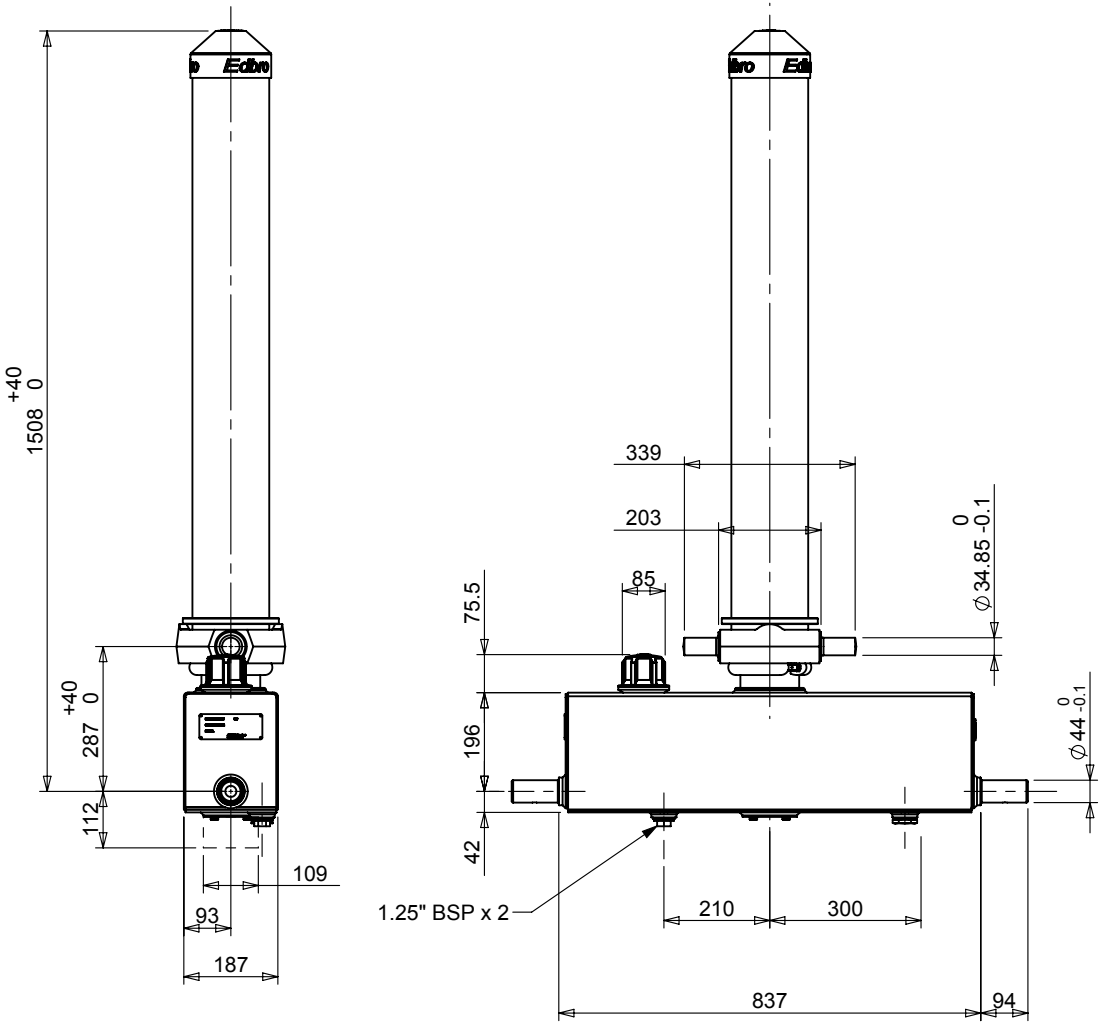

***Includes 10mm Pull Out.**
All Stages Chrome Plated

SPECIFICATION — TIPPING CAPACITY : 13-14 TONNES***

Stage	Diameter	Length	Stroke	Swept Volume
OUTER COVER	152	1170	-	-
0	117	1370	-	-
1	98	1390	1210	9
2	79	1390	1222	6
4	63	1390	1227	4
		Total (+5/-10)	3659	19
Final stroke reduced by	0	Priming Volume		4
Cylinder Mass (Kg)	130	Total Volume (Litres)		23
Maximum Pressure (Bar)	175	Oil Tank Capacity (L)		25

***TIPPING CAPACITY AT WORKING PRESSURE

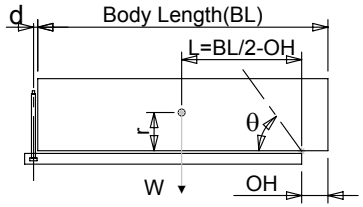

BODY LENGTH (BL)						OH
4000		4250		4500		
14	50°	13	47°	13	44°	150
14	55°	14	51°	14	48°	450
				14	52°	750

Tipping angle (θ)
Body + payload mass,W (tonne)

d = 0; r = 900; Working Pressure 150 bar

For guidance only;
Higher working pressures and tipping capacities may be possible.
To check your application email - applications@edbro.co.uk

NOTES

1. This cylinder is for lifting purposes only and side load conditions should be avoided
2. Cylinder is painted in primer paint to RAL5013
3. Refer to www.edbro.com for;-
   - Bracket details
   - Installation instructions that must be observed
   - Correct oil selection
   - An explanation of tipping capacity

JOST UK Ltd
Edbro House, Nelson Street, Bolton, England, BL3 2JJ
Tel +44 (0) 1204 528888 Fax +44 (0) 1204 531957
Email: sales-uk@jost-world.com Web: www.edbro.com

Technical Specifications are subject to change without notice
Date Created/Updated: 07 October 2020
Refer www.edbro.com to confirm latest specification
All dimensions are in 'mm', unless otherwise stated

Cylinder 3 stage front end with plain eye

CS110E33194B19A01C

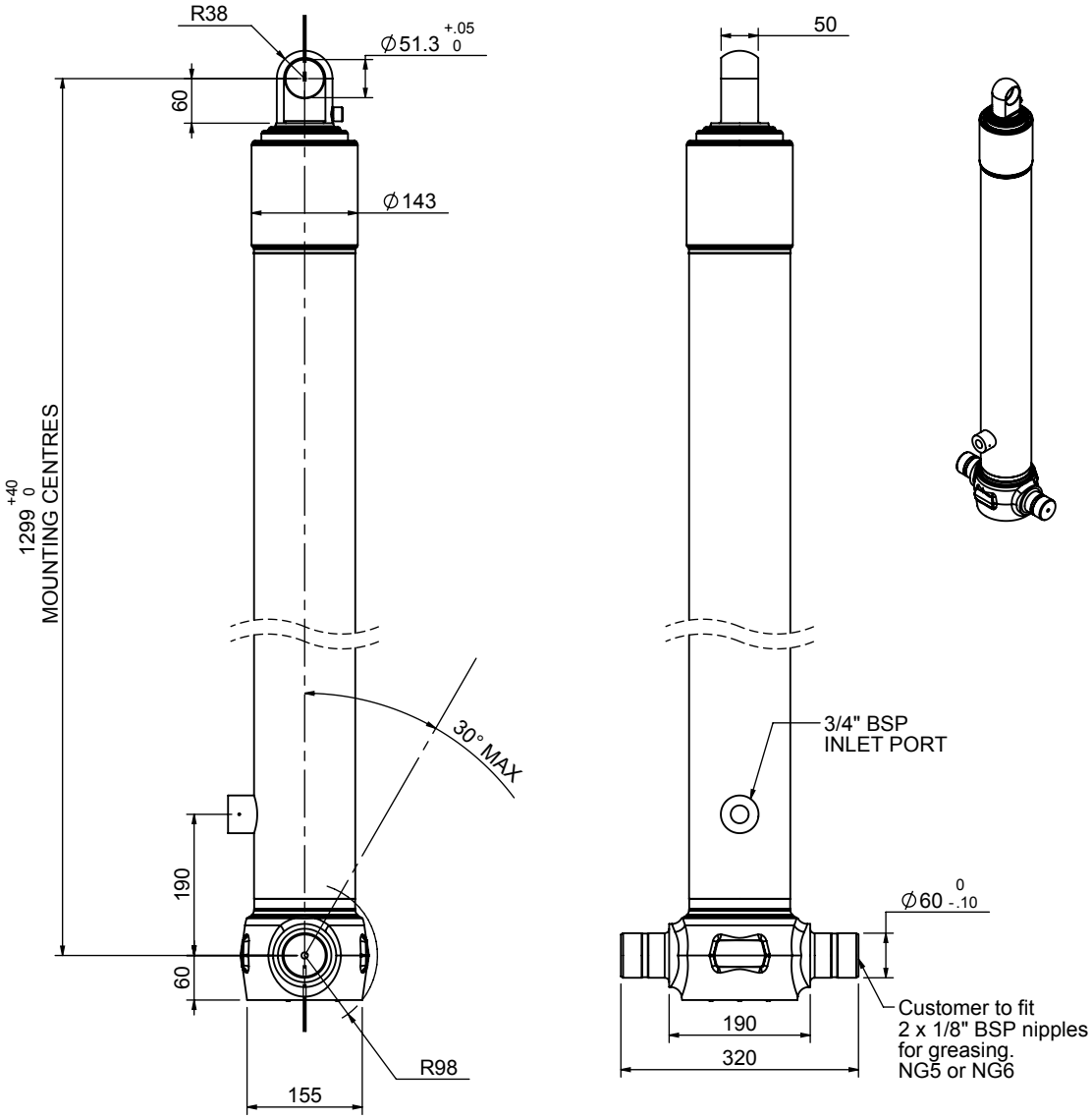

***Include 9mm Pull Out**
All Stages Fully Chromed

SPECIFICATION		RATED CAPACITY : 21-33 TONNES***		
Stage	Diameter	Length	Stroke	Swept Volume
-	-	-	-	-
-	-	-	-	-
-	-	-	-	-
0	136	1275	-	-
1	117	1240	1054	11
2	98	1240	1067	8
3	79	1240	1072	5
Final stroke reduced by	0	Total (+5/-10)	3193	24
Cylinder Mass (Kg)	72.90	Priming Volume		8.9
Rated Pressure (Bar)	150	Total Volume (Litres)		32.9
Maximum Pressure (Bar)	175	Max. first stage thrust		130 KN

***TIPPING CAPACITY AT RATED PRESSURE

d = 178 ; r = 750

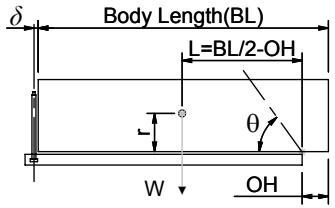

BODY LENGTH (BL)						OH
4375		4500		4625		
22	46°	21	44°	21	43°	150
27	50°	26	48°	25	46°	450
XX	XX°	33	52°	31	50°	750

Tipping angle (θ)
Body + payload mass,W (tonne)

For guidance only;
Higher Rated Pressures may be possible. To check your application, email Edbro plc at <applications@edbro.co.uk>

NOTES

- If hydraulic pressure is used to limit overloading, the system relief valve must be set to the Rated Pressure unless agreed otherwise by Edbro
- The system relief valve can be set to Maximum Pressure if the load is limited by other means.See RATINGS page for advice
- This cylinder is for lifting purposes only and sideload conditions must be avoided
- Cylinder is painted in primer paint to RAL5013
- See bracket options page BRKT01, BRKT02
- See installation instructions INSTALL01
- Use oil according to specification OIL01

Edbro
SETTING THE INDUSTRY STANDARD

Edbro plc
Nelson Street, Bolton, Lancashire BL3 2JJ UK
Tel +44 (0) 1204 528888 Fax +44 (0) 1204 531957
Email: postmaster@edbro.com Web: www.edbro.com

Technical Specifications are subject to change without notice

Date Created/Updated: 16 March 2011 10:23:27

Refer www.edbro.com to confirm latest specification
All dimensions are in 'mm', unless otherwise stated

Cylinder 3 stage front end with plain eye

CS110E33494B19A01C

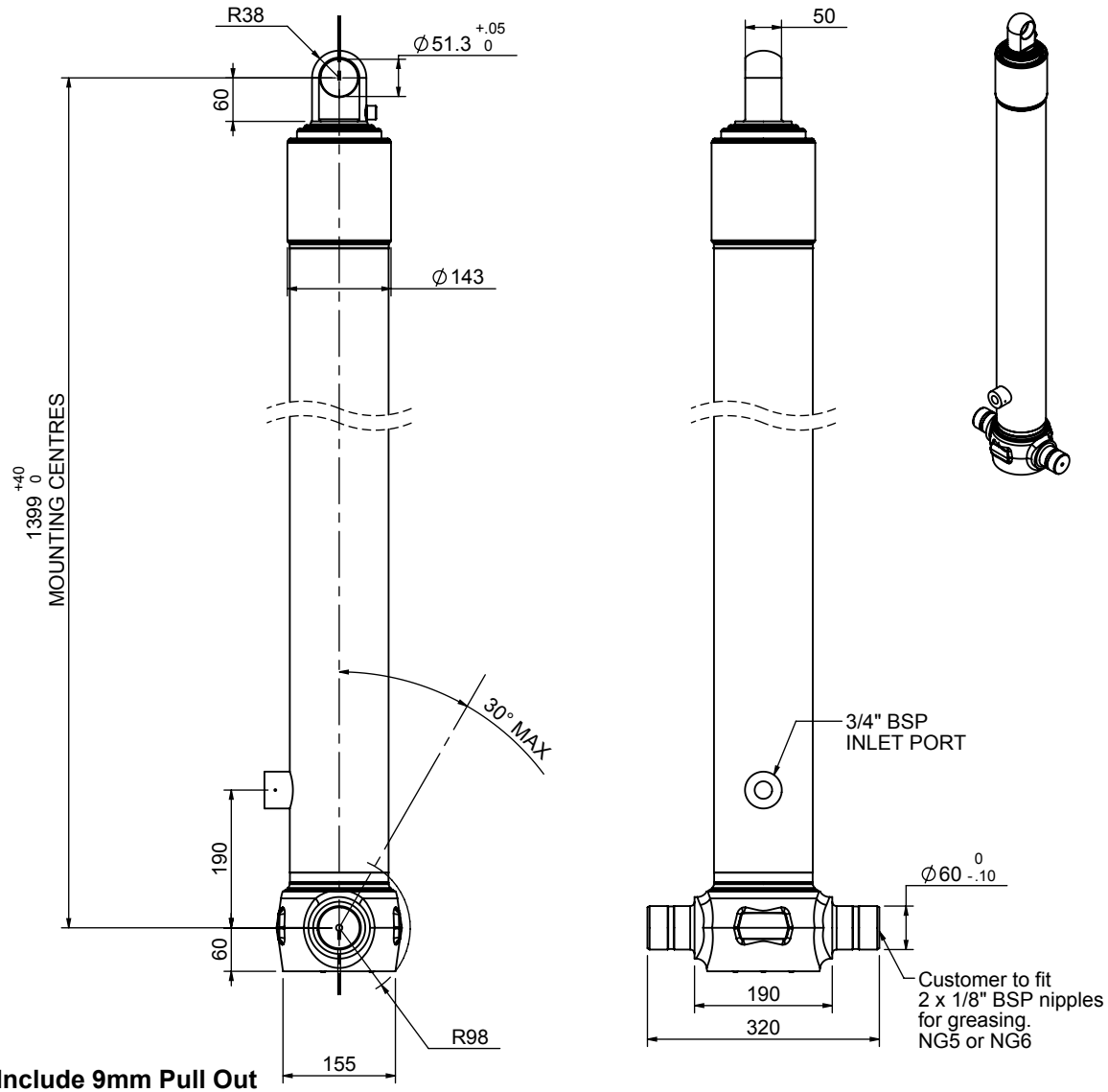

***Include 9mm Pull Out**
All Stages Fully Chromed

SPECIFICATION		RATED CAPACITY : 23-35 TONNES***		
Stage	Diameter	Length	Stroke	Swept Volume
-	-	-	-	-
-	-	-	-	-
-	-	-	-	-
0	136	1375	-	-
1	117	1340	1154	12
2	98	1340	1167	9
3	79	1340	1172	6
Final stroke reduced by	0	Total (+5/-10)	3493	27
Cylinder Mass (Kg)	78.11	Priming Volume		9.6
Rated Pressure (Bar)	165	Total Volume (Litres)		36.6
Maximum Pressure (Bar)	175	Max. first stage thrust		130 KN

***TIPPING CAPACITY AT RATED PRESSURE

d = 178 ; r = 750

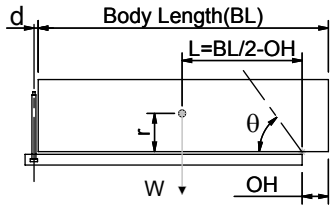

BODY LENGTH (BL)						OH
4500		4625		4750		
24	46°	23	44°	23	43°	150
28	49°	27	48°	26	46°	450
35	54°	33	52°	32	50°	750

Tipping angle (θ)

Body + payload mass,W (tonne)

For guidance only;
Higher Rated Pressures may be possible. To check your application, email Edbro plc at <applications@edbro.co.uk>

NOTES

- If hydraulic pressure is used to limit overloading, the system relief valve must be set to the Rated Pressure unless agreed otherwise by Edbro
- The system relief valve can be set to Maximum Pressure if the load is limited by other means.See RATINGS page for advice
- This cylinder is for lifting purposes only and sideload conditions must be avoided
- Cylinder is painted in primer paint to RAL5013
- See bracket options page BRKT01, BRKT02
- See installation instructions INSTALL01
- Use oil according to specification OIL01

Edbro
SETTING THE INDUSTRY STANDARD

Edbro plc
Nelson Street, Bolton, Lancashire BL3 2JJ UK
Tel +44 (0) 1204 528888 Fax +44 (0) 1204 531957
Email: postmaster@edbro.com Web: www.edbro.com

Technical Specifications are subject to change without notice

Date Created/Updated: 15 February 2011 14:15:08

Refer www.edbro.com to confirm latest specification
All dimensions are in 'mm', unless otherwise stated

Cylinder 3 stage front end with plain eye

CS110E34094B19A01C

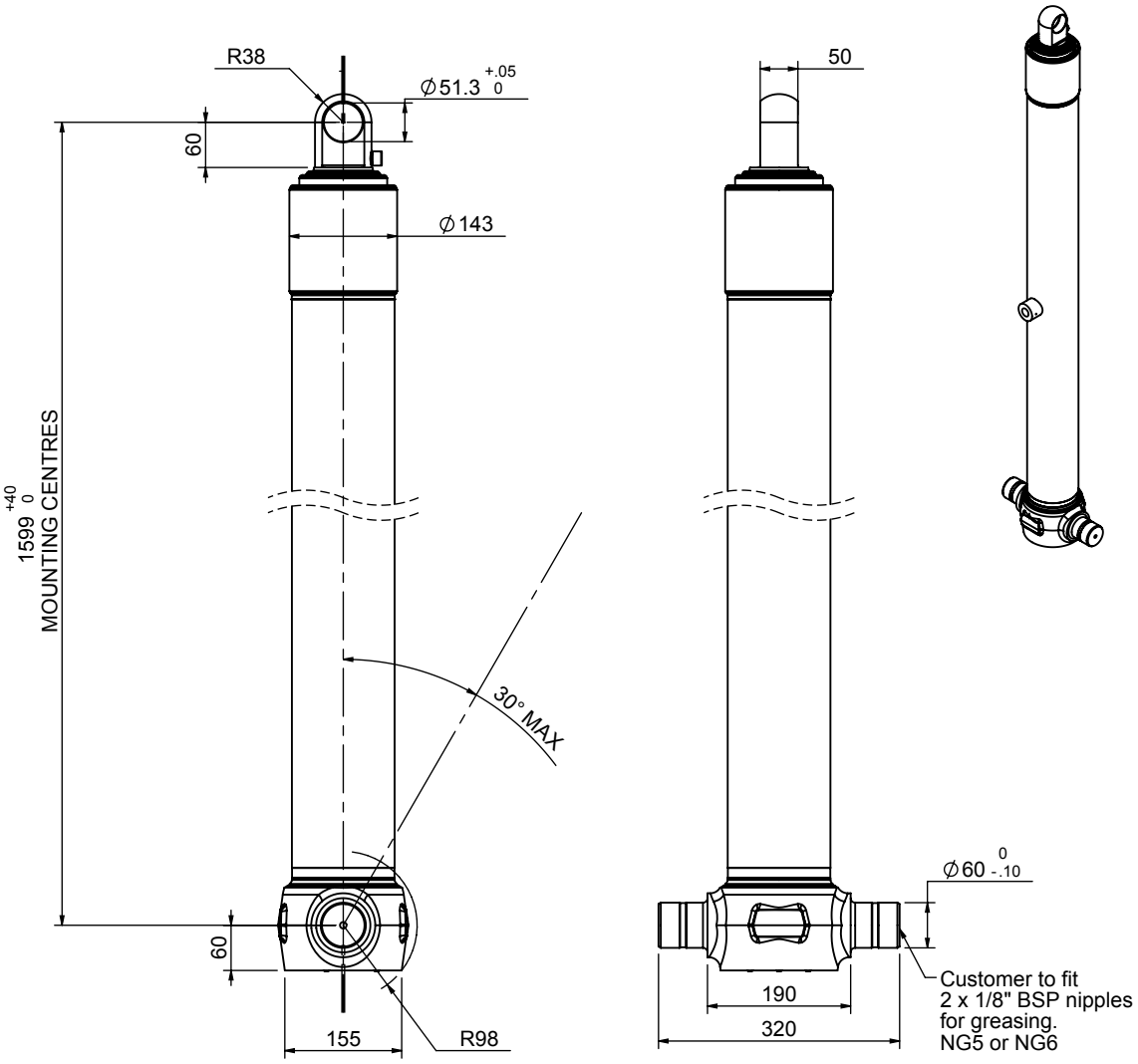

***Include 9mm Pull Out**
All Stages Fully Chromed

SPECIFICATION			RATED CAPACITY : 22-30 TONNES***	
Stage	Diameter	Length	Stroke	Swept Volume
-	-	-	-	-
-	-	-	-	-
-	-	-	-	-
0	136	1575	-	-
1	117	1540	1354	15
2	98	1540	1367	10
3	79	1540	1372	7
Final stroke reduced by	0	Total (+5/-10)	4093	32
Cylinder Mass (Kg)	88.52	Priming Volume		11.2
Rated Pressure (Bar)	165	Total Volume (Litres)		43.2
Maximum Pressure (Bar)	175	Max. first stage thrust		130 KN

***TIPPING CAPACITY AT RATED PRESSURE

d = 0 ; r = 750

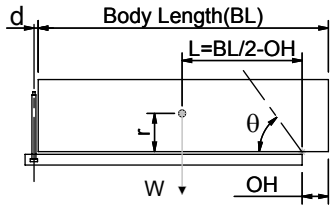

BODY LENGTH (BL)						OH
5500		5625		5750		
23	46°	22	45°	22	44°	150
26	49°	25	48°	25	47°	450
30	53°	29	51°	28	50°	750

Tipping angle (θ)
Body + payload mass,W (tonne)

For guidance only;
Higher Rated Pressures may be possible. To check your application, email Edbro plc at <applications@edbro.co.uk>

NOTES

- If hydraulic pressure is used to limit overloading, the system relief valve must be set to the Rated Pressure unless agreed otherwise by Edbro
- The system relief valve can be set to Maximum Pressure if the load is limited by other means.See RATINGS page for advice
- This cylinder is for lifting purposes only and sideload conditions must be avoided
- Cylinder is painted in primer paint to RAL5013
- See bracket options page BRKT01, BRKT02
- See installation instructions INSTALL01
- Use oil according to specification OIL01

Edbro
SETTING THE INDUSTRY STANDARD

Edbro plc
Nelson Street, Bolton, Lancashire BL3 2JJ UK
Tel +44 (0) 1204 528888 Fax +44 (0) 1204 531957
Email: postmaster@edbro.com Web: www.edbro.com

Technical Specifications are subject to change without notice

Date Created/Updated: 15 February 2011 14:17:04

Refer www.edbro.com to confirm latest specification
All dimensions are in 'mm', unless otherwise stated

Cylinder 3 stage front end with Outer Cover

CS110033494B19A11C

****ALLOW 50mm TO REMOVE CAP FOR SERVICING**

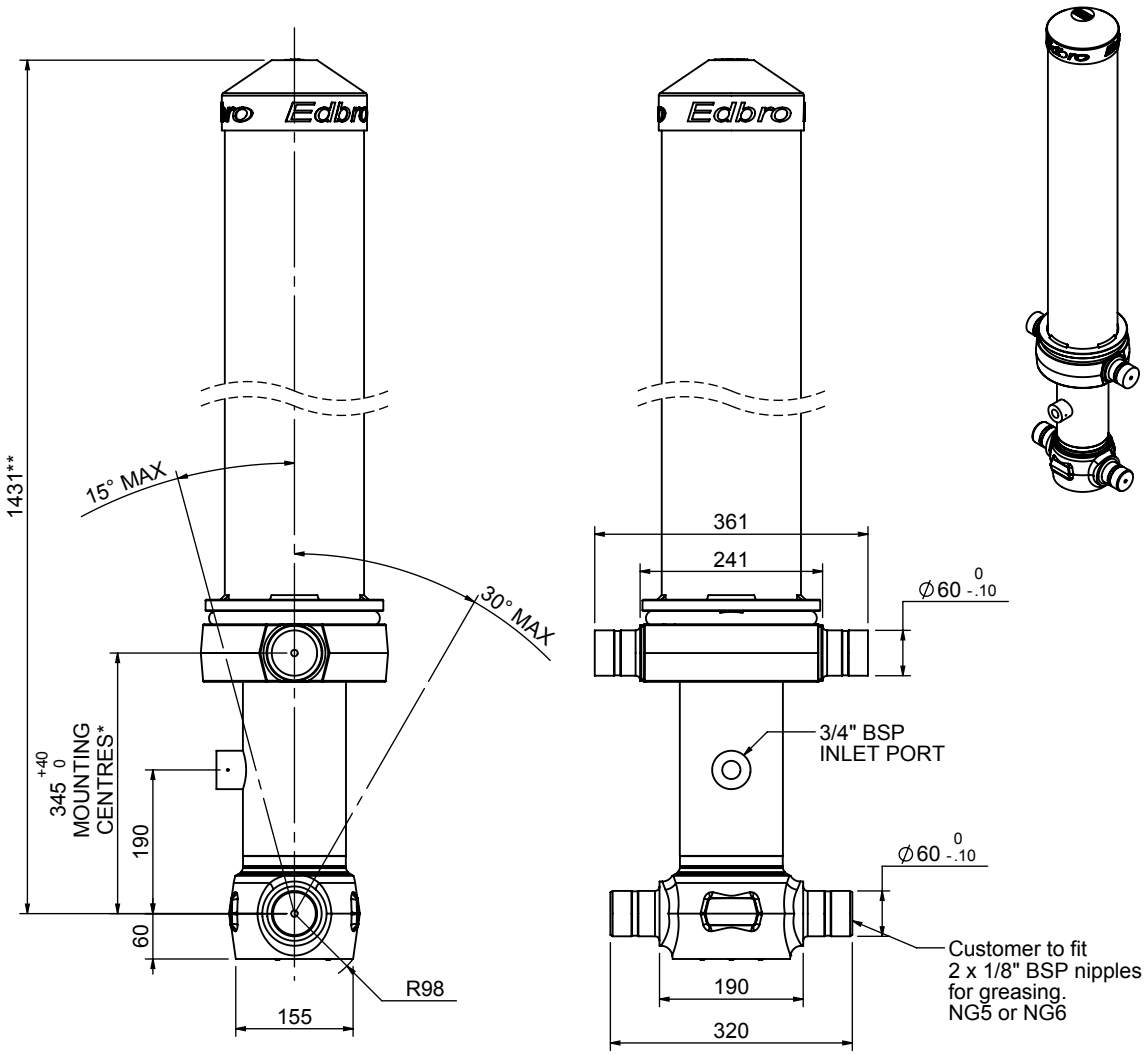

***Include 14mm Pull Out**
All Stages Chrome Plated

SPECIFICATION — RATED CAPACITY : 22-35 TONNES***

Stage	Diameter	Length	Stroke	Swept Volume
-	-	-	-	-
-	-	-	-	-
OUTER COVER	184	1035	-	-
0	136	1375	-	-
1	117	1340	1149	12
2	98	1340	1167	9
3	79	1340	1172	6
Final stroke reduced by	0	Total (+5/-10)	3488	27
Cylinder Mass (Kg)	116.10	Priming Volume		9.6
Rated Pressure (Bar)	150	Total Volume (Litres)		36.6
Maximum Pressure (Bar)	175	Max. first stage thrust		130 KN

***TIPPING CAPACITY AT RATED PRESSURE

d = 178 ; r = 750

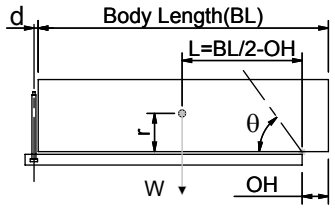

BODY LENGTH (BL)						OH
4500		4625		4750		
23	46°	23	44°	22	43°	150
28	49°	27	48°	26	46°	450
		35	52°	33	50°	750

Tipping angle (θ)
Body + payload mass,W (tonne)

For guidance only;
Higher Rated Pressures may be possible. To check your application, email Edbro plc at <applications@edbro.co.uk>

NOTES

- If hydraulic pressure is used to limit overloading, the system relief valve must be set to the Rated Pressure unless agreed otherwise by Edbro
- The system relief valve can be set to Maximum Pressure if the load is limited by other means.See RATINGS page for advice
- This cylinder is for lifting purposes only and sideload conditions must be avoided
- Cylinder is painted in primer paint to RAL5013
- See bracket options page BRKT01, BRKT02
- See installation instructions INSTALL01
- Use oil according to specification OIL01

Edbro
SETTING THE INDUSTRY STANDARD

Edbro plc
Nelson Street, Bolton, Lancashire BL3 2JJ UK
Tel +44 (0) 1204 528888 Fax +44 (0) 1204 531957
Email: postmaster@edbro.com Web: www.edbro.com

Technical Specifications are subject to change without notice

Date Created/Updated: 16 February 2011 14:10:09

Refer www.edbro.com to confirm latest specification
All dimensions are in 'mm', unless otherwise stated

Cylinder 3 stage front end with Outer Cover

CS110033644B19A11C

****ALLOW 50mm TO REMOVE CAP FOR SERVICING**

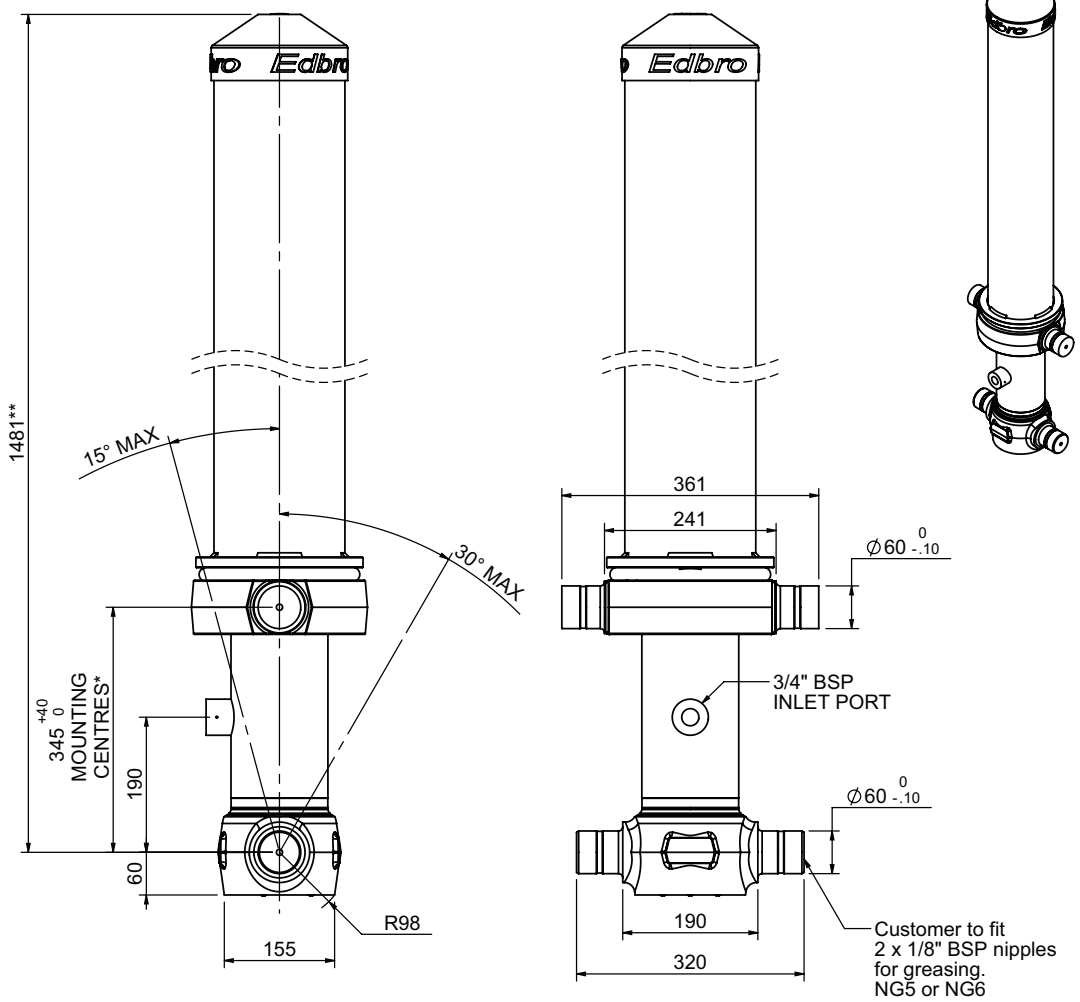

***Include 14mm Pull Out**
All Stages Chrome Plated

SPECIFICATION — RATED CAPACITY : 20-32 TONNES***

Stage	Diameter	Length	Stroke	Swept Volume
-	-	-	-	-
-	-	-	-	-
OUTER COVER	184	1085	-	-
0	136	1425	-	-
1	117	1390	1199	13
2	98	1390	1217	9
3	79	1390	1222	6
Final stroke reduced by	0	Total (+5/-10)	3638	28
Cylinder Mass (Kg)	119.40	Priming Volume		9.5
Rated Pressure (Bar)	150	Total Volume (Litres)		37.5
Maximum Pressure (Bar)	175	Max. first stage thrust		130 KN

***TIPPING CAPACITY AT RATED PRESSURE

d = 178 ; r = 750

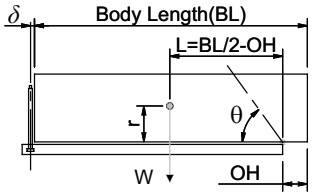

BODY LENGTH (BL)						OH
4500		4625		4750		
21	48°	21	46°	20	45°	150
26	51°	25	50°	24	48°	450
		32	54°	30	52°	750

Tipping angle (θ)
Body + payload mass,W (tonne)

For guidance only;
Higher Rated Pressures may be possible. To check your application, email Edbro plc at <applications@edbro.co.uk>

NOTES

- If hydraulic pressure is used to limit overloading, the system relief valve must be set to the Rated Pressure unless agreed otherwise by Edbro
- The system relief valve can be set to Maximum Pressure if the load is limited by other means.See RATINGS page for advice
- This cylinder is for lifting purposes only and sideload conditions must be avoided
- Cylinder is painted in primer paint to RAL5013
- See bracket options page BRKT01, BRKT02
- See installation instructions INSTALL01
- Use oil according to specification OIL01

Edbro
SETTING THE INDUSTRY STANDARD

Edbro plc
Nelson Street, Bolton, Lancashire BL3 2JJ UK
Tel +44 (0) 1204 528888 Fax +44 (0) 1204 531957
Email: postmaster@edbro.com Web: www.edbro.com

Technical Specifications are subject to change without notice
Date Created/Updated: 26 April 2011 12:13:48
Refer www.edbro.com to confirm latest specification
All dimensions are in 'mm', unless otherwise stated

Cylinder 4 stage front end with Outer Cover

CS110044071B19A11

****ALLOW 50mm TO REMOVE CAP FOR SERVICING**

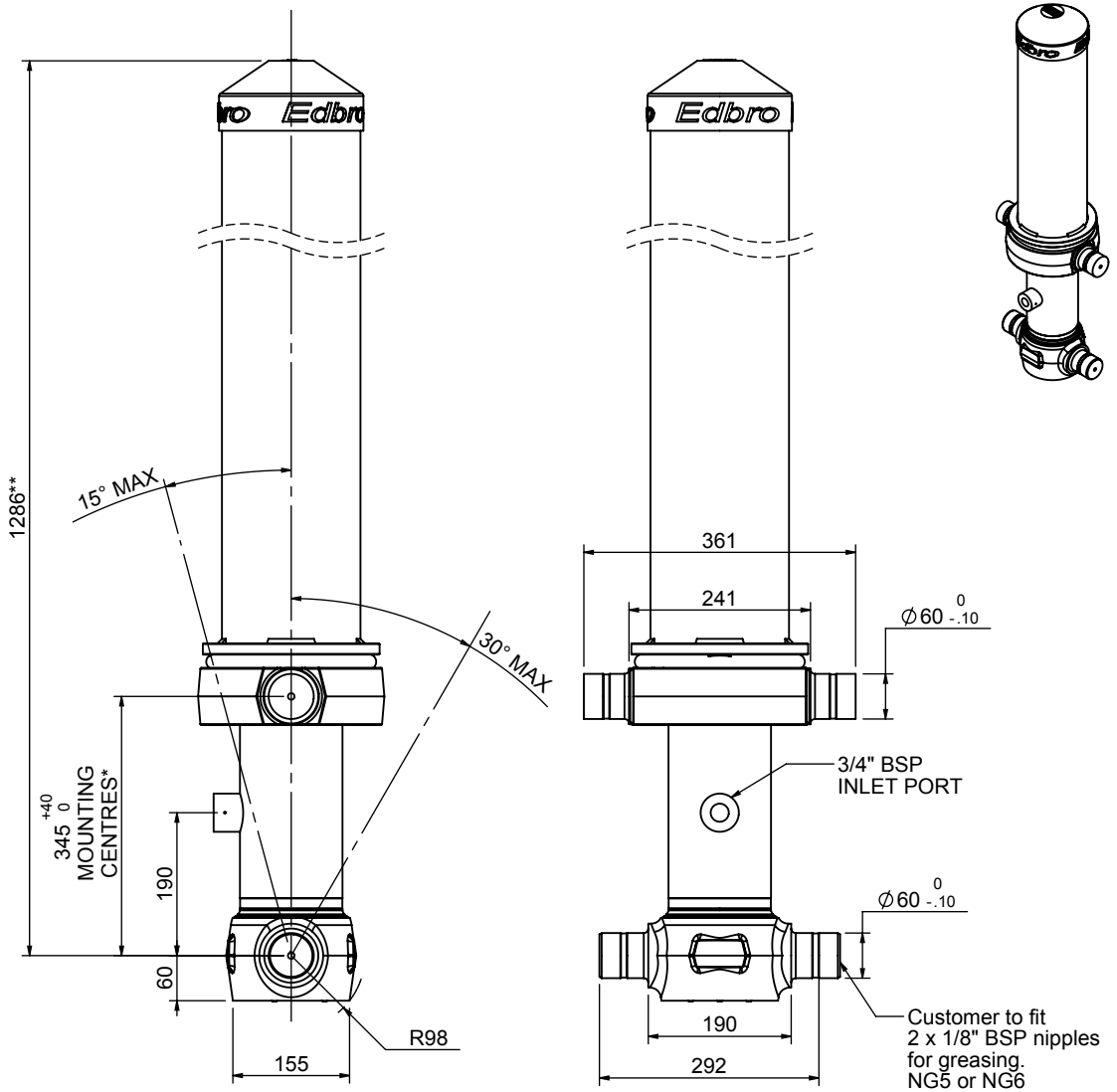

***Include 14mm Pull Out**

SPECIFICATION — RATED CAPACITY : 17-29 TONNES***

Stage	Diameter	Length	Stroke	Swept Volume
-	-	-	-	-
OUTER COVER	184	890	-	-
0	136	1225	-	-
1	117	1190	999	11
2	98	1190	1017	8
3	79	1190	1022	5
4	63	1190	1027	3
Final stroke reduced by	0	Total (+5/-10)	4065	27
Cylinder Mass (Kg)	112.10	Priming Volume		7.7
Rated Pressure (Bar)	175	Total Volume (Litres)		34.7
Maximum Pressure (Bar)	175	Max. first stage thrust		130 KN

***TIPPING CAPACITY AT RATED PRESSURE

d = 178 ; r = 750

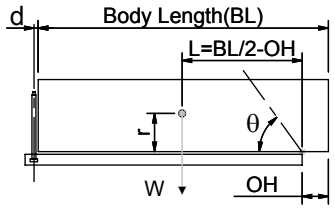

BODY LENGTH (BL)						OH
5000		5250		5500		
19	48°	18	46°	17	43°	150
22	51°	21	49°	19	46°	450
29	55°	26	52°	23	49°	750

Tipping angle (θ)

Body + payload mass,W (tonne)

For guidance only;
Higher Rated Pressures may be possible. To check your application, email Edbro plc at <applications@edbro.co.uk>

NOTES

- If hydraulic pressure is used to limit overloading, the system relief valve must be set to the Rated Pressure unless agreed otherwise by Edbro
- The system relief valve can be set to Maximum Pressure if the load is limited by other means.See RATINGS page for advice
- This cylinder is for lifting purposes only and sideload conditions must be avoided
- Cylinder is painted in primer paint to RAL5013
- See bracket options page BRKT01, BRKT02
- See installation instructions INSTALL01
- Use oil according to specification OIL01

Edbro
SETTING THE INDUSTRY STANDARD

Edbro plc
Nelson Street, Bolton, Lancashire BL3 2JJ UK
Tel +44 (0) 1204 528888 Fax +44 (0) 1204 531957
Email: postmaster@edbro.com Web: www.edbro.com

Technical Specifications are subject to change without notice

Date Created/Updated: 17 February 2011 17:22:50

Refer www.edbro.com to confirm latest specification
All dimensions are in 'mm', unless otherwise stated

Cylinder 3 stage front end with Outer Cover

CS110034094B19A11C

****ALLOW 50mm TO REMOVE CAP FOR SERVICING**

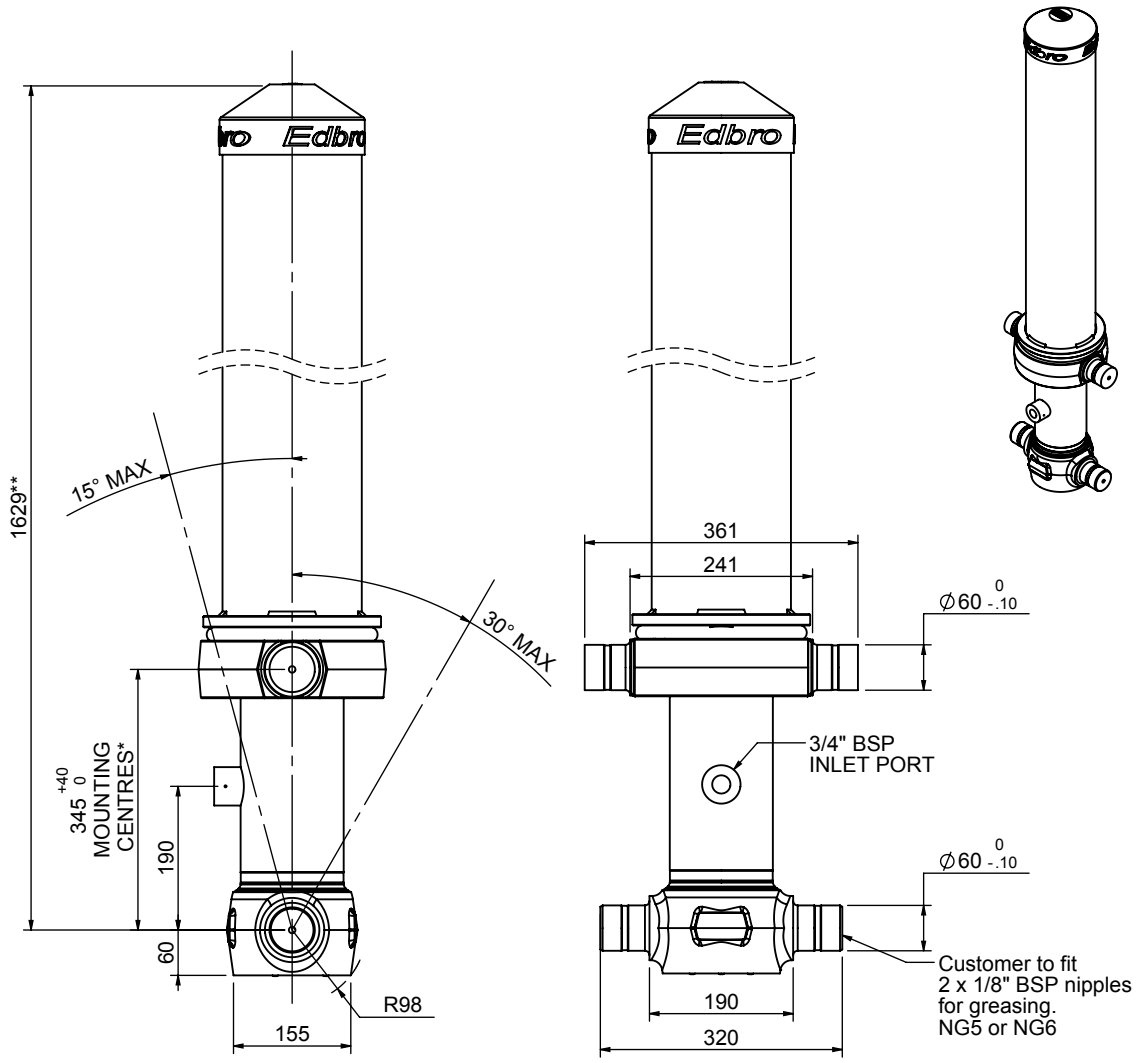

***Include 14mm Pull Out**
All Stages Chrome Plated

SPECIFICATION — RATED CAPACITY : 21-33 TONNES***

Stage	Diameter	Length	Stroke	Swept Volume
-	-	-	-	-
-	-	-	-	-
OUTER COVER	184	1235	-	-
0	136	1575	-	-
1	117	1540	1349	15
2	98	1540	1367	10
3	79	1540	1372	7
Final stroke reduced by	0	Total (+5/-10)	4088	32
Cylinder Mass (Kg)	129.31	Priming Volume		11.2
Rated Pressure (Bar)	150	Total Volume (Litres)		216
Maximum Pressure (Bar)	175	Max. first stage thrust		130 KN

***TIPPING CAPACITY AT RATED PRESSURE

d = 178 ; r = 750

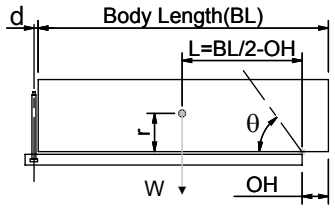

BODY LENGTH (BL)						OH
5100		5350		5600		
23	47°	22	45°	21	43°	150
26	51°	25	48°	24	46°	450
33	54°	30	51°	28	48°	750

Tipping angle (θ)
Body + payload mass,W (tonne)

For guidance only;
Higher Rated Pressures may be possible. To check your application, email Edbro plc at <applications@edbro.co.uk>

NOTES

- If hydraulic pressure is used to limit overloading, the system relief valve must be set to the Rated Pressure unless agreed otherwise by Edbro
- The system relief valve can be set to Maximum Pressure if the load is limited by other means.See RATINGS page for advice
- This cylinder is for lifting purposes only and sideload conditions must be avoided
- Cylinder is painted in primer paint to RAL5013
- See bracket options page BRKT01, BRKT02
- See installation instructions INSTALL01
- Use oil according to specification OIL01

Edbro
SETTING THE INDUSTRY STANDARD

Edbro plc
Nelson Street, Bolton, Lancashire BL3 2JJ UK
Tel +44 (0) 1204 528888 Fax +44 (0) 1204 531957
Email: postmaster@edbro.com Web: www.edbro.com

Technical Specifications are subject to change without notice

Date Created/Updated: 16 February 2011 14:07:46

Refer www.edbro.com to confirm latest specification
All dimensions are in 'mm', unless otherwise stated

Cylinder 4 stage front end with outer cover

CS110044271B19A31C

****ALLOW 50mm TO REMOVE CAP FOR SERVICING**

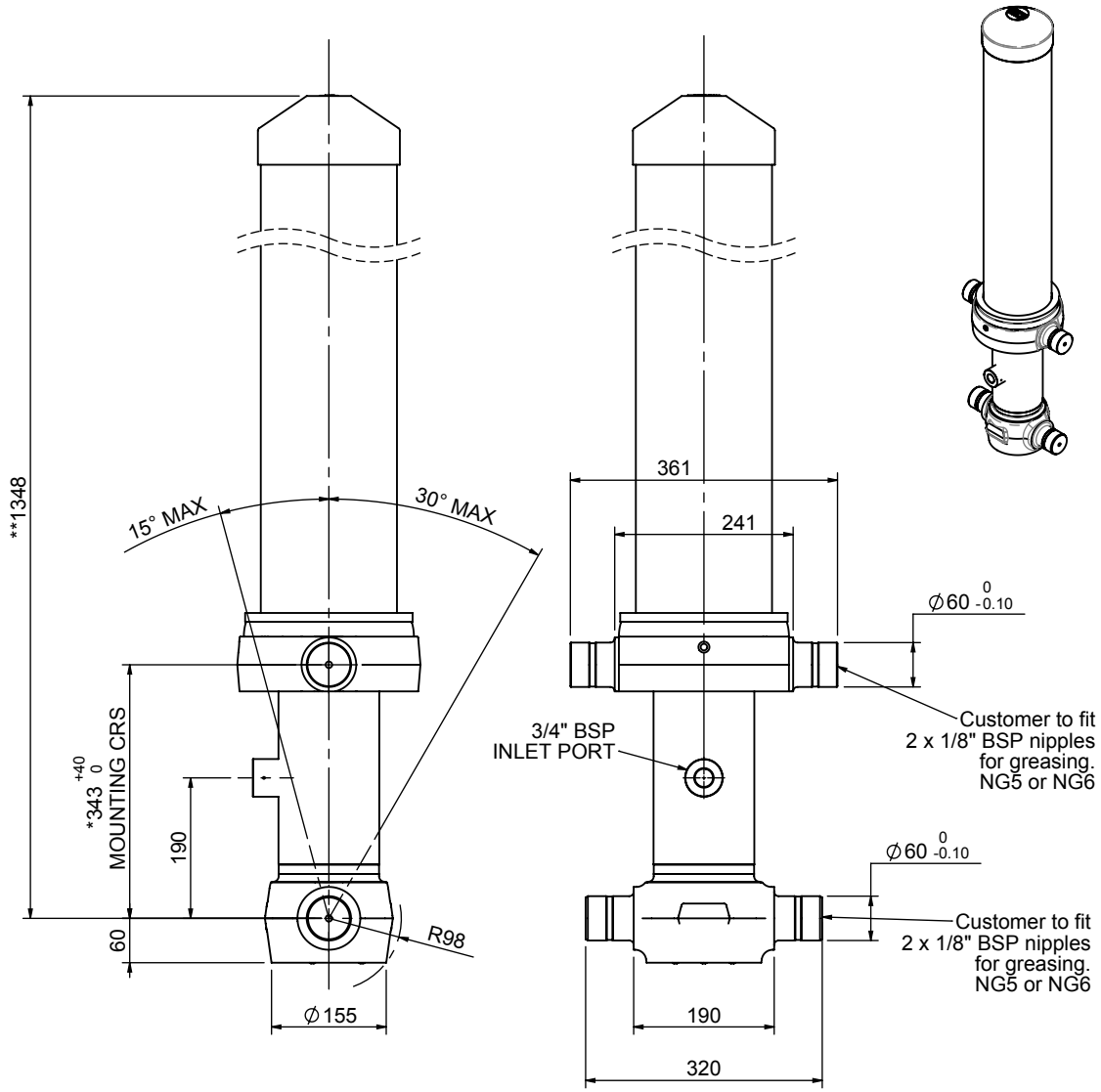

***Includes 14mm Pull Out.**
All Stages Chrome Plated

SPECIFICATION		TIPPING CAPACITY : 17-27 TONNES***		
Stage	Diameter	Length	Stroke	Swept Volume
-	-	-	-	-
OUTER COVER	184	950	-	-
0	136	1275	-	-
1	117	1240	1048	11
2	98	1240	1067	8
3	79	1240	1072	5
4	63	1240	1077	3
		Total (+5/-10)	4264	27
Final stroke reduced by	0	Priming Volume		8
Cylinder Mass (Kg)	126	Total Volume (Litres)		35
Maximum Pressure (Bar)	190	Max. first stage thrust		130 KN

***TIPPING CAPACITY AT WORKING PRESSURE

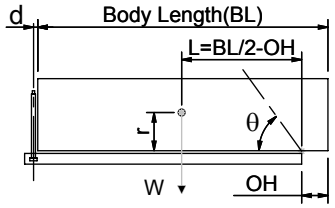

BODY LENGTH (BL)						OH
5250		5500		5750		
18	48°	17	46°	17	44°	150
22	51°	20	49°	19	46°	450
27	55°	24	52°	22	49°	750

Tipping angle (θ)

Body + payload mass,W (tonne)

d = 178; r = 750; Working Pressure 175 bar

For guidance only;
Higher working pressures and tipping capacities may be possible.
To check your application email - applications@edbro.co.uk

NOTES

1. This cylinder is for lifting purposes only and side load conditions should be avoided
2. Cylinder is painted in primer paint to RAL5013
3. Refer to www.edbro.com for;-
   - Bracket details
   - Installation instructions that must be observed
   - Correct oil selection
   - An explanation of tipping capacity

Edbro
SETTING THE INDUSTRY STANDARD

Edbro plc
Nelson Street, Bolton, England, BL3 2JJ
Tel +44 (0) 1204 528888 Fax +44 (0) 1204 531957
Email: postmaster@edbro.com Web: www.edbro.com

Technical Specifications are subject to change without notice

Date Created/Updated: 17 July 2012

Refer www.edbro.com to confirm latest specification
All dimensions are in 'mm', unless otherwise stated

Cylinder 3 stage front end with plain eye

CS130E33319B19A01C

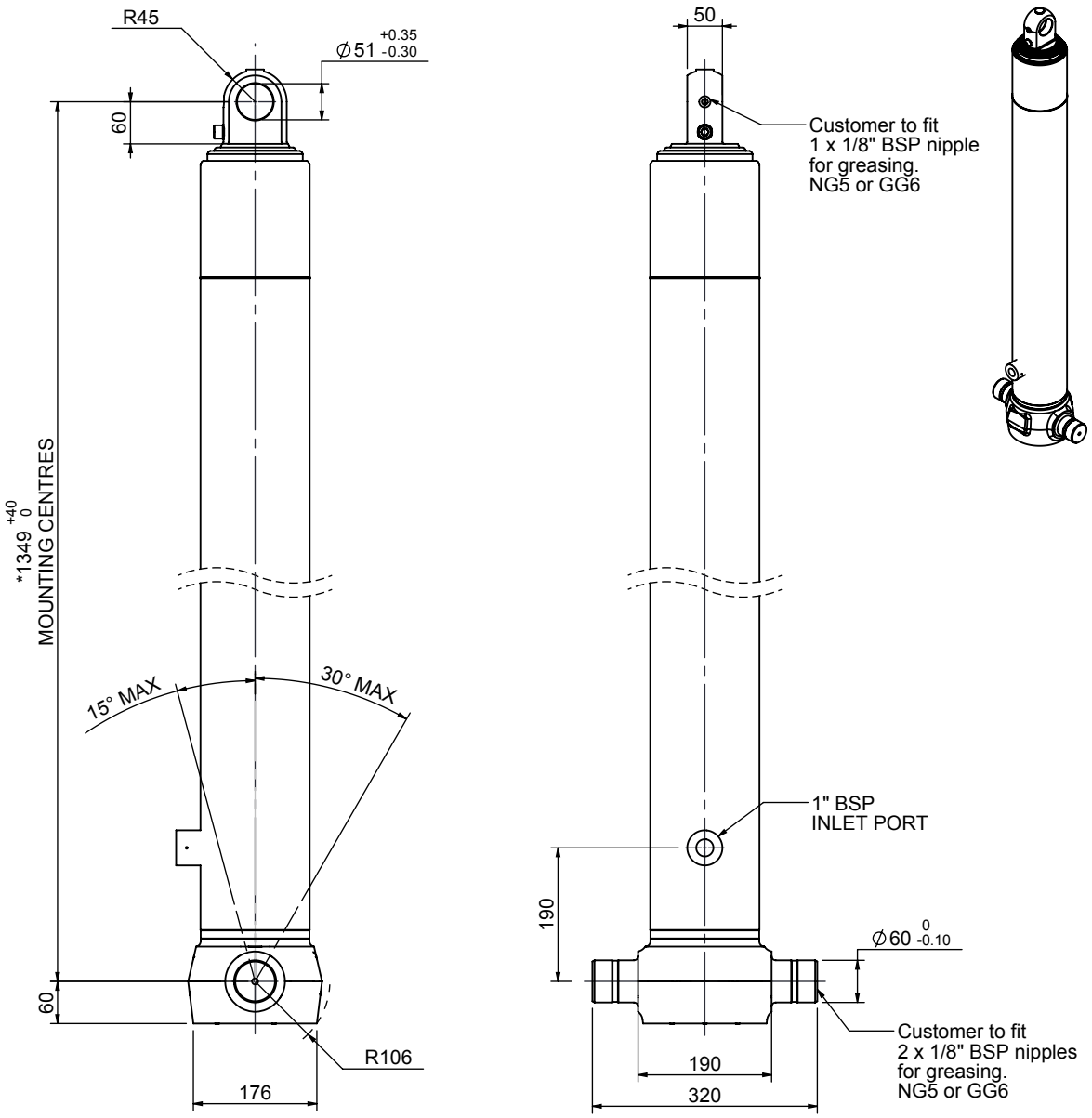

***Includes 9mm Pull Out. All Stages Chrome Plated**

SPECIFICATION — TIPPING CAPACITY : 30-56 TONNES***

Stage	Diameter	Length	Stroke	Swept Volume
-	-	-	-	-
-	-	-	-	-
-	-	-	-	-
0	155	1325	-	-
1	136	1290	1088	16
2	117	1290	1112	12
3	98	1290	1117	8
		Total (+5/-10)	3317	36
Final stroke reduced by	0	Priming Volume		9
Cylinder Mass (Kg)	106	Total Volume (Litres)		45
Maximum Pressure (Bar)	190	Max. first stage thrust		200 KN

***TIPPING CAPACITY AT WORKING PRESSURE

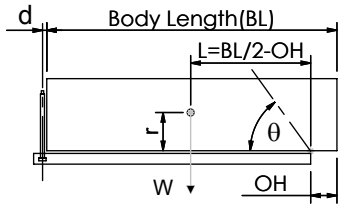

BODY LENGTH (BL)						OH
4450		4650		4850		
32	47°	31	44°	30	42°	150
40	50°	37	48°	35	45°	450
56	55°	49	52°	44	49°	750

Tipping angle (θ)

Body + payload mass,W (tonne)

d = 0; r = 750; Working Pressure 135 bar

For guidance only;
Higher working pressures and tipping capacities may be possible.
To check your application email - applications@edbro.co.uk

NOTES

1. This cylinder is for lifting purposes only and side load conditions should be avoided
2. Cylinder is painted in primer paint to RAL5013
3. Refer to www.edbro.com for;-
   - Bracket details
   - Installation instructions that must be observed
   - Correct oil selection
   - An explanation of tipping capacity

Edbro
SETTING THE INDUSTRY STANDARD

Edbro plc
Nelson Street, Bolton, England, BL3 2JJ
Tel +44 (0) 1204 528888 Fax +44 (0) 1204 531957
Email: postmaster@edbro.com Web: www.edbro.com

Technical Specifications are subject to change without notice

Date Created/Updated: 14 October 2015

Refer www.edbro.com to confirm latest specification
All dimensions are in 'mm', unless otherwise stated

Cylinder 3 stage front end with plain eye

CS130E33469B19A01C

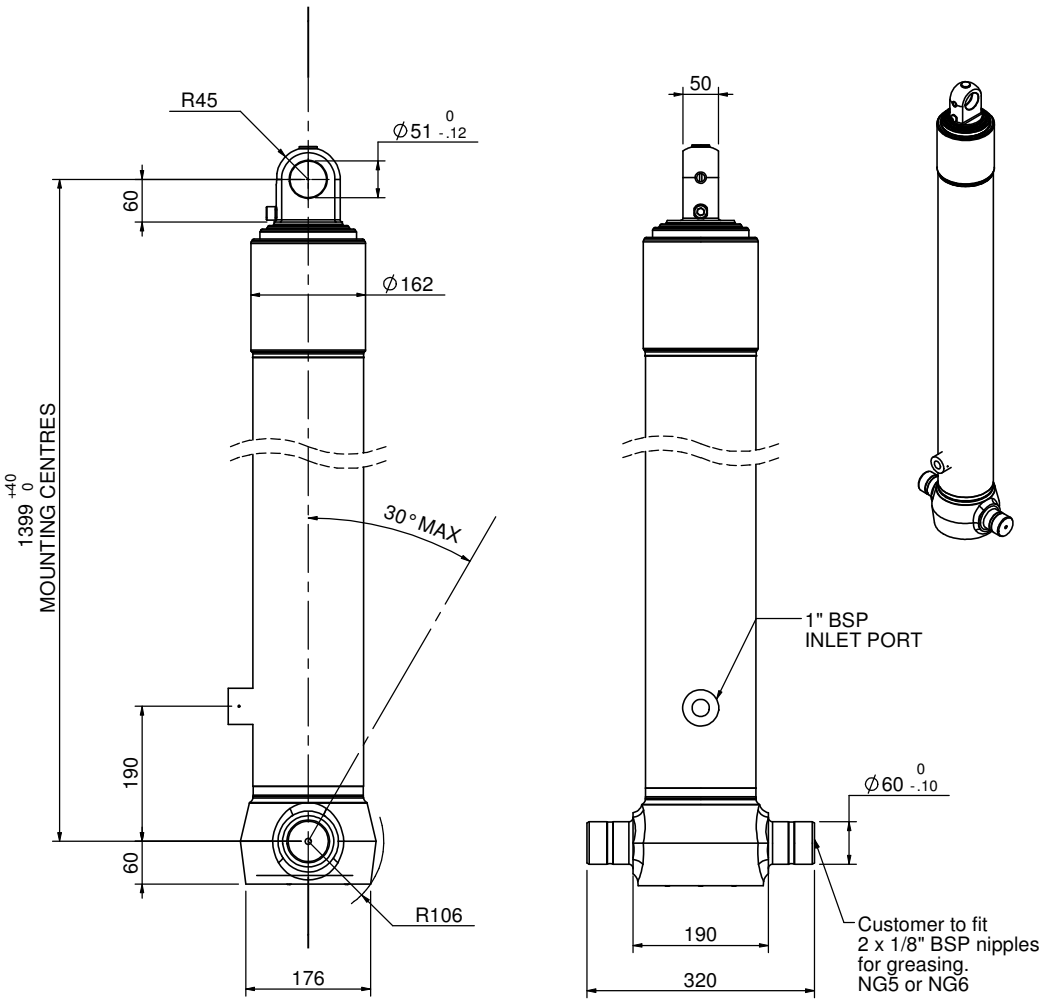

Stage	Diameter	Length	Stroke	Swept Volume
-	-	-	-	-
-	-	-	-	-
-	-	-	-	-
0	155	1375	-	-
1	136	1340	1138	17
2	117	1340	1162	12
3	98	1340	1167	9
Final stroke reduced by	0	Total (+5/-10)	3467	38
Cylinder Mass (Kg)	112.64	Priming Volume		12.8
Rated Pressure (Bar)	135	Total Volume (Litres)		50.8
Maximum Pressure (Bar)	175	Max. first stage thrust		200 KN

d = 0 ; r = 750

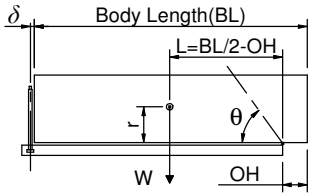

BODY LENGTH (BL)						OH
4600		4800		5000		
30	47°	29	45°	28	43°	150
36	51°	34	48°	33	46°	450
47	55°	43	52°	39	50°	750

Tipping angle (θ)

Body + payload mass,W (tonne)

For guidance only;
Higher Rated Pressures may be possible. To check your application, email Edbro plc at <applications@edbro.co.uk>

- If hydraulic pressure is used to limit overloading, the system relief valve must be set to the Rated Pressure unless agreed otherwise by Edbro
- The system relief valve can be set to Maximum Pressure if the load is limited by other means.See RATINGS page for advice
- This cylinder is for lifting purposes only and sideload conditions must be avoided
- Cylinder is painted in primer paint to RAL5013
- See bracket options page BRKT01, BRKT02
- See installation instructions INSTALL01
- Use oil according to specification OIL01

***Include 9mm Pull Out**
All Stages Chrome Plated

Edbro
SETTING THE INDUSTRY STANDARD

Edbro plc
Nelson Street, Bolton, Lancashire BL3 2JJ UK
Tel +44 (0) 1204 528888 Fax +44 (0) 1204 531957
Email: postmaster@edbro.com Web: www.edbro.com

Technical Specifications are subject to change without notice
Date Created/Updated: 22 December 2009 14:36:33
Refer www.edbro.com to confirm latest specification
All dimensions are in 'mm', unless otherwise stated

Cylinder 4 stage front end with plain eye

CS130E43641B19A01

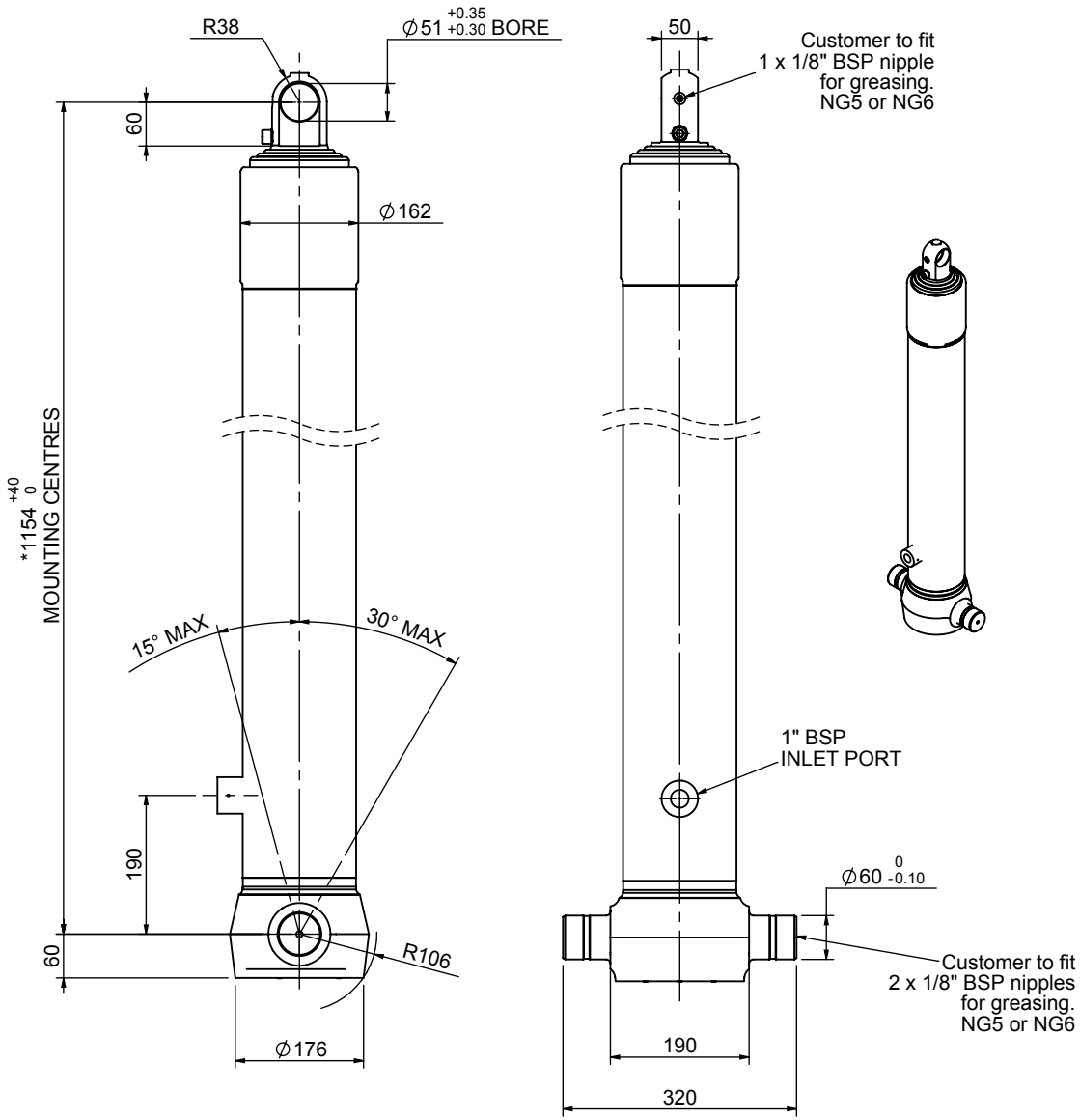

***Includes 9mm Pull Out.**
Last Stage Chrome Plated

SPECIFICATION — TIPPING CAPACITY : 25-43 TONNES***

Stage	Diameter	Length	Stroke	Swept Volume
-	-	-	-	-
-	-	-	-	-
0	155	1125	-	-
1	136	1090	888	13
2	117	1090	912	10
3	98	1090	917	7
4	79	1090	922	5
		Total (+5/-10)	3639	35
Final stroke reduced by	0	Priming Volume		9
Cylinder Mass (Kg)	102	Total Volume (Litres)		44
Maximum Pressure (Bar)	190	Max. first stage thrust		200 KN

***TIPPING CAPACITY AT WORKING PRESSURE

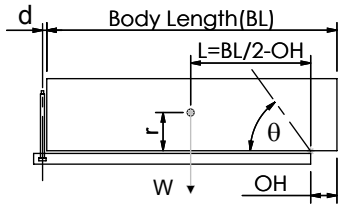

BODY LENGTH (BL)						OH
4850		5050		5250		
27	47°	26	44°	25	43°	150
33	50°	31	48°	29	45°	450
43	54°	38	51°	35	49°	750

Tipping angle (θ)
Body + payload mass,W (tonne)

d = 0; r = 750; Working Pressure 175 bar

For guidance only;
Higher working pressures and tipping capacities may be possible.
To check your application email - applications@edbro.co.uk

NOTES

1. This cylinder is for lifting purposes only and side load conditions should be avoided
2. Cylinder is painted in primer paint to RAL5013
3. Refer to www.edbro.com for;-
   - Bracket details
   - Installation instructions that must be observed
   - Correct oil selection
   - An explanation of tipping capacity

Edbro
SETTING THE INDUSTRY STANDARD

Edbro plc
Nelson Street, Bolton, England, BL3 2JJ
Tel +44 (0) 1204 528888 Fax +44 (0) 1204 531957
Email: postmaster@edbro.com Web: www.edbro.com

Technical Specifications are subject to change without notice

Date Created/Updated: 10 September 2012

Refer www.edbro.com to confirm latest specification
All dimensions are in 'mm', unless otherwise stated

Cylinder Outline Drawing

CS130E43641B19A01

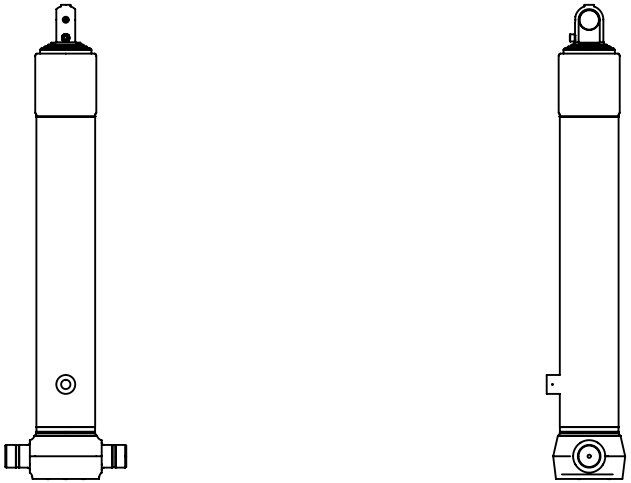

CS130E43641B19A01

Edbro
SETTING THE INDUSTRY STANDARD

Edbro plc
Nelson Street, Bolton, Lancashire BL3 2JJ UK
Tel +44 (0) 1204 528888 Fax +44 (0) 1204 531957
Email: postmaster@edbro.com Web: www.edbro.com

Technical Specifications are subject to change without notice

Date Created/Updated: 10 September 2012

Scale: 1:20

Cylinder 4 stage front end with plain eye

CS130E43841B19A01C

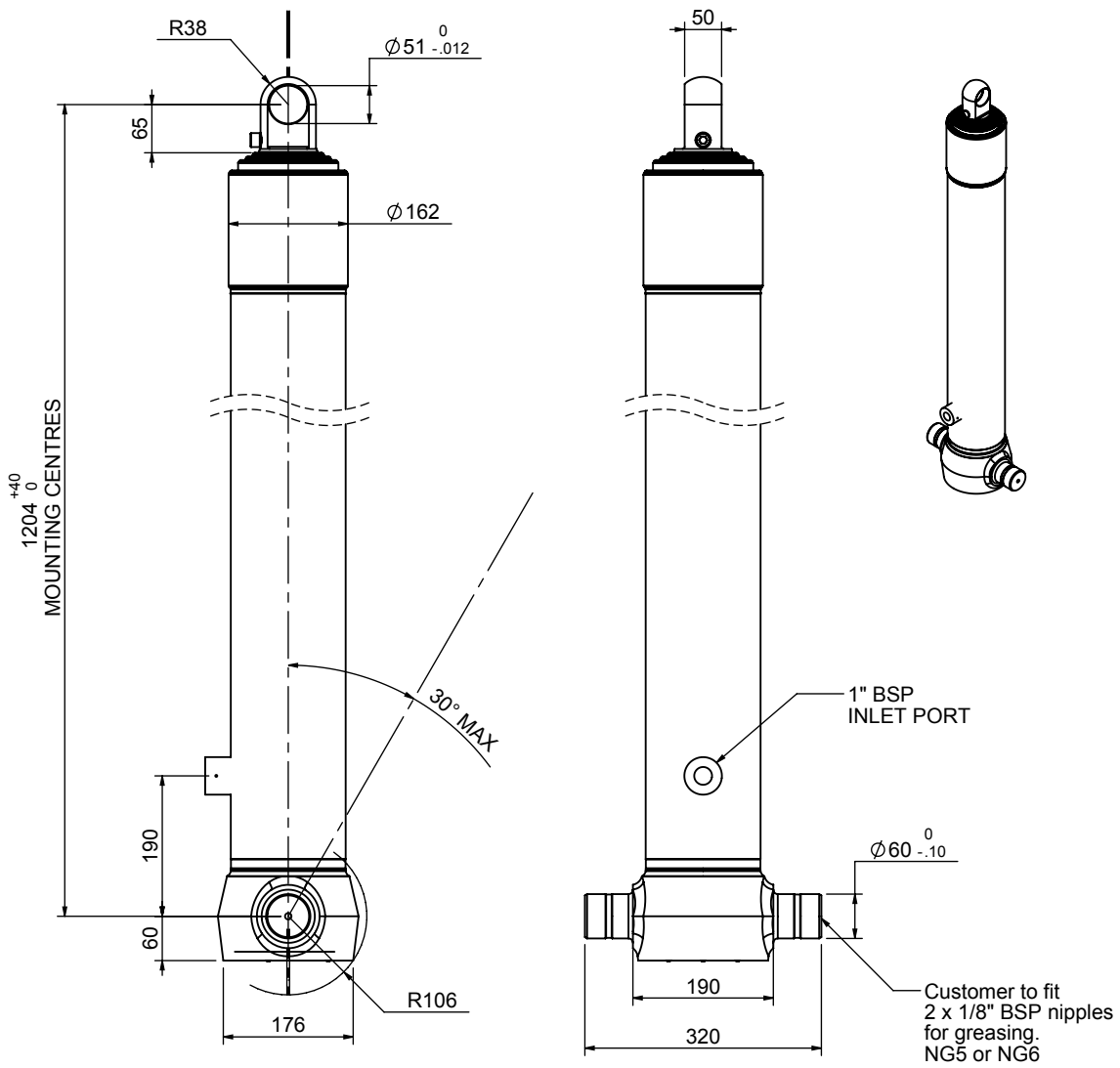

***Include 9mm Pull Out**
All Stages Fully Chromed

SPECIFICATION			RATED CAPACITY : 25-42 TONNES***	
Stage	Diameter	Length	Stroke	Swept Volume
-	-	-	-	-
-	-	-	-	-
0	155	1175	-	-
1	136	1140	938	14
2	117	1140	962	10
3	98	1140	967	7
4	79	1140	972	5
Final stroke reduced by	0	Total (+5/-10)	3839	36
Cylinder Mass (Kg)	111.08	Priming Volume		10.7
Rated Pressure (Bar)	175	Total Volume (Litres)		46.7
Maximum Pressure (Bar)	175	Max. first stage thrust		200 KN

***TIPPING CAPACITY AT RATED PRESSURE

d = 0 ; r = 750

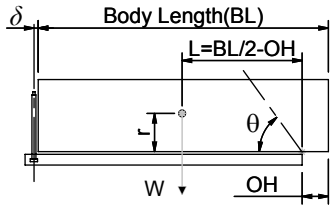

BODY LENGTH (BL)						OH
5000		5250		5500		
27	48°	26	45°	25	43°	150
33	51°	30	48°	28	46°	450
42	55°	37	51°	34	49°	750

Tipping angle (θ)
Body + payload mass,W (tonne)

For guidance only;
Higher Rated Pressures may be possible. To check your application, email Edbro plc at <applications@edbro.co.uk>

NOTES

- If hydraulic pressure is used to limit overloading, the system relief valve must be set to the Rated Pressure unless agreed otherwise by Edbro
- The system relief valve can be set to Maximum Pressure if the load is limited by other means.See RATINGS page for advice
- This cylinder is for lifting purposes only and sideload conditions must be avoided
- Cylinder is painted in primer paint to RAL5013
- See bracket options page BRKT01, BRKT02
- See installation instructions INSTALL01
- Use oil according to specification OIL01

Edbro
SETTING THE INDUSTRY STANDARD

Edbro plc
Nelson Street, Bolton, Lancashire BL3 2JJ UK
Tel +44 (0) 1204 528888 Fax +44 (0) 1204 531957
Email: postmaster@edbro.com Web: www.edbro.com

Technical Specifications are subject to change without notice
Date Created/Updated: 16 July 2010 09:53:55
Refer www.edbro.com to confirm latest specification
All dimensions are in 'mm', unless otherwise stated

Cylinder Outline Drawing

CS130E43841B19A01C

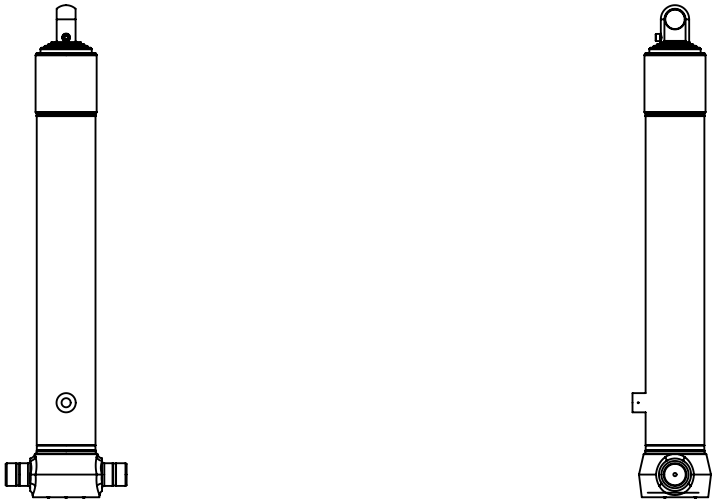

CS130E43841B19A01C

Edbro plc
Nelson Street, Bolton, Lancashire BL3 2JJ UK
Tel +44 (0) 1204 528888 Fax +44 (0) 1204 531957
Email: postmaster@edbro.com Web: www.edbro.com

SETTING THE INDUSTRY STANDARD

Technical Specifications are subject to change without notice

Date Created/Updated: 16 July 2010 09:53:55

Scale: 1:10

Cylinder 4 stage front end with plain eye

CS130E44041B19A01C

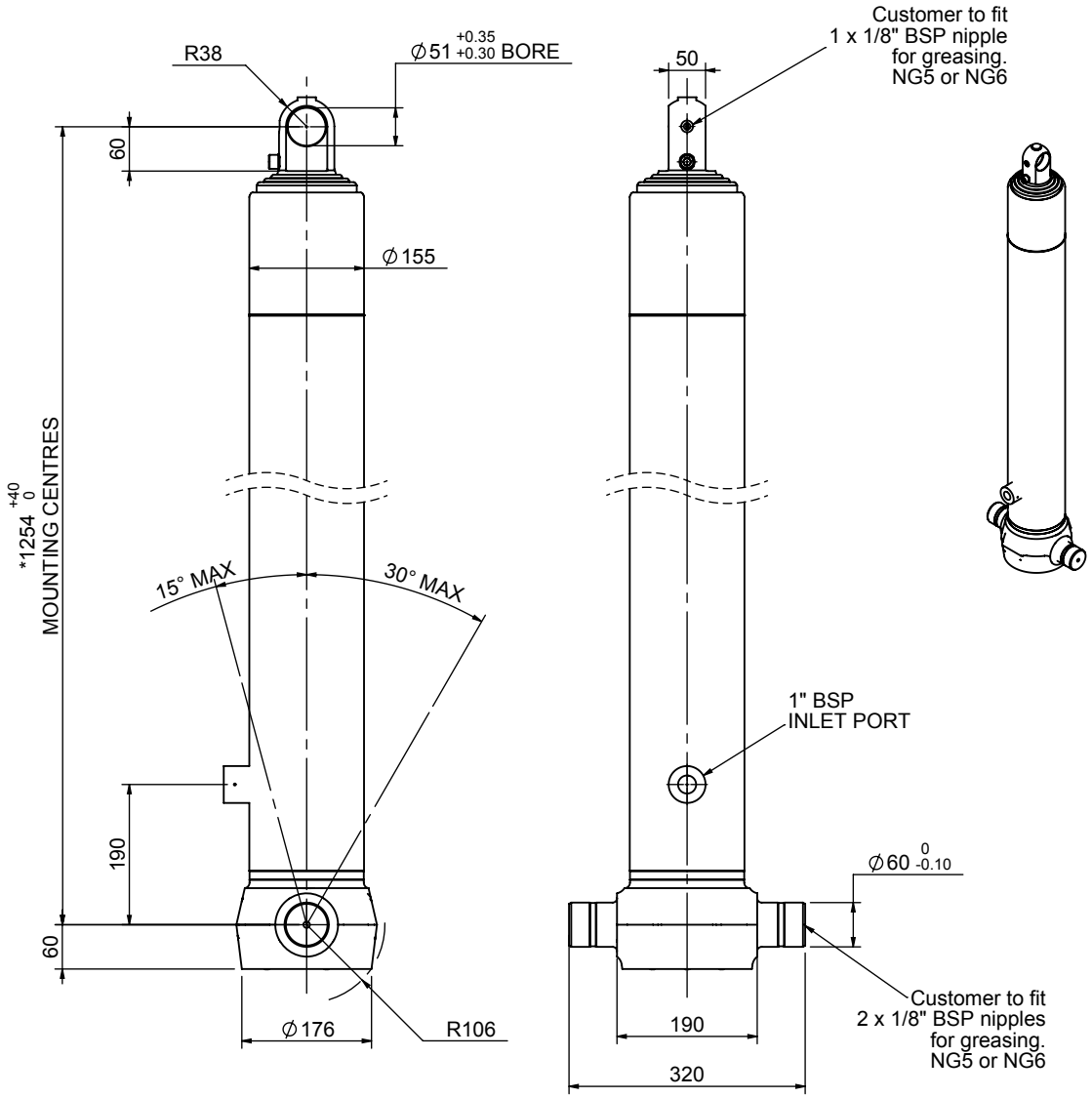

***Includes 9mm Pull Out.**
All Stages Chrome Plated

SPECIFICATION — TIPPING CAPACITY : 24-38 TONNES***

Stage	Diameter	Length	Stroke	Swept Volume
-	-	-	-	-
-	-	-	-	-
0	155	1225	-	-
1	136	1190	988	14
2	117	1190	1012	11
3	98	1190	1017	8
4	79	1190	1022	5
		Total (+5/-10)	4039	38
Final stroke reduced by	0	Priming Volume		10
Cylinder Mass (Kg)	108	Total Volume (Litres)		48
Maximum Pressure (Bar)	190	Max. first stage thrust		200 KN

***TIPPING CAPACITY AT WORKING PRESSURE

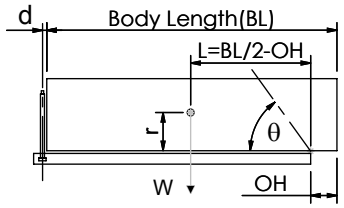

BODY LENGTH (BL)						OH
5350		5550		5750		
26	47°	25	45°	24	43°	150
31	50°	29	48°	28	46°	450
38	54°	35	51°	33	49°	750

Tipping angle (θ)
Body + payload mass,W (tonne)

d = 0; r = 750; Working Pressure 175 bar

For guidance only;
Higher working pressures and tipping capacities may be possible.
To check your application email - applications@edbro.co.uk

NOTES

1. This cylinder is for lifting purposes only and side load conditions should be avoided
2. Cylinder is painted in primer paint to RAL5013
3. Refer to www.edbro.com for;-
   - Bracket details
   - Installation instructions that must be observed
   - Correct oil selection
   - An explanation of tipping capacity

Edbro
SETTING THE INDUSTRY STANDARD

Edbro plc
Nelson Street, Bolton, England, BL3 2JJ
Tel +44 (0) 1204 528888 Fax +44 (0) 1204 531957
Email: postmaster@edbro.com Web: www.edbro.com

Technical Specifications are subject to change without notice

Date Created/Updated: 18 August 2014

Refer www.edbro.com to confirm latest specification
All dimensions are in 'mm', unless otherwise stated

Cylinder Outline Drawing

CS130E44041B19A01C

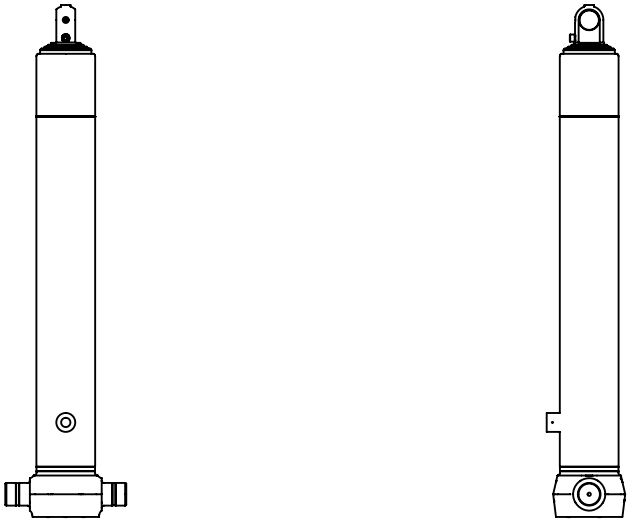

CS130E44041B19A01C

Edbro plc
Nelson Street, Bolton, Lancashire BL3 2JJ UK
Tel +44 (0) 1204 528888 Fax +44 (0) 1204 531957
Email: postmaster@edbro.com Web: www.edbro.com

SETTING THE INDUSTRY STANDARD

Technical Specifications are subject to change without notice

Date Created/Updated: 18 August 2014

Scale: 1:20

Cylinder 4 stage front end with plain eye

CS130E44241B19A01C

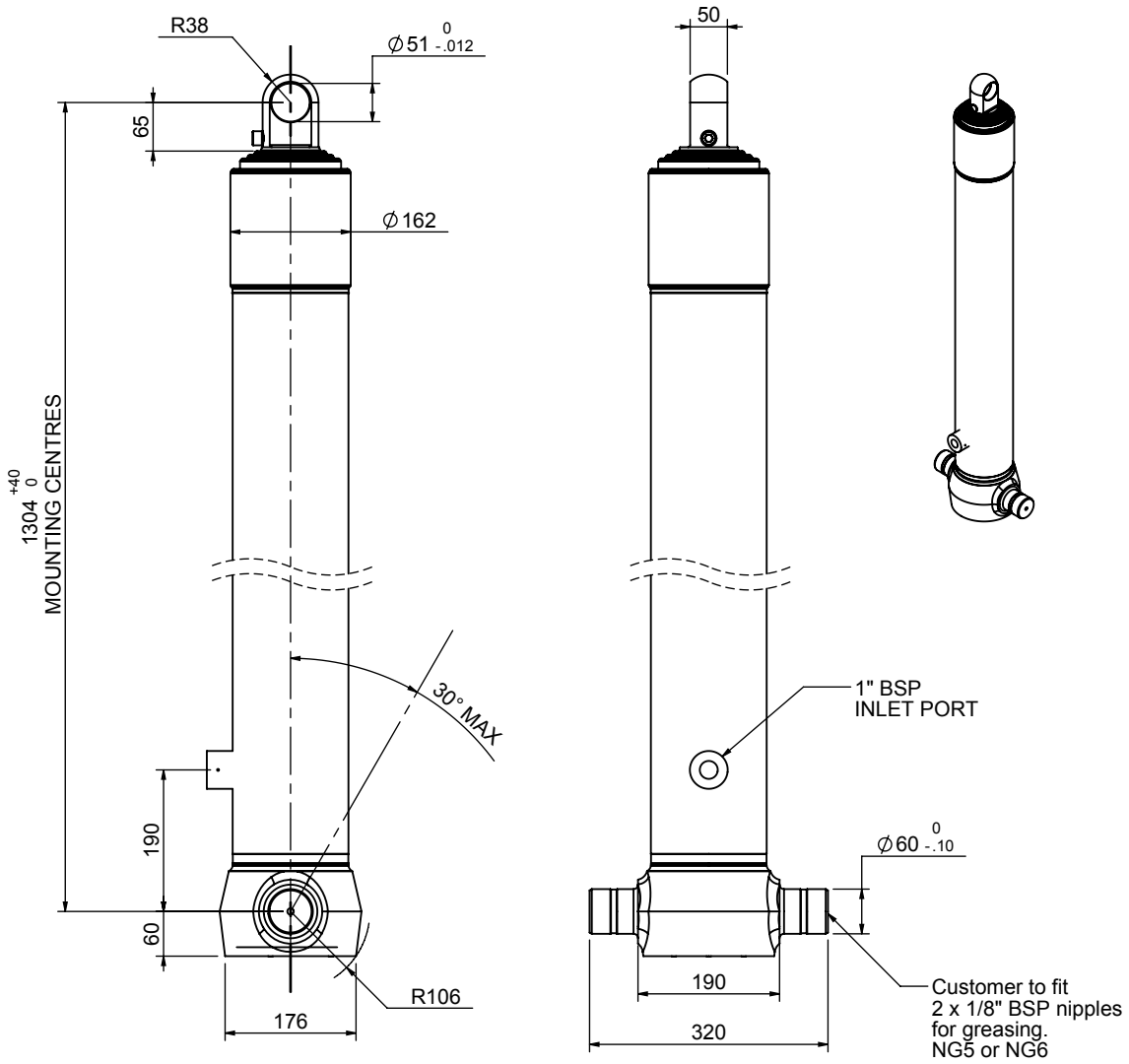

***Include 9mm Pull Out**
All Stages Fully Chromed

SPECIFICATION			RATED CAPACITY : 24-38 TONNES***	
Stage	Diameter	Length	Stroke	Swept Volume
-	-	-	-	-
-	-	-	-	-
0	155	1275	-	-
1	136	1240	1038	15
2	117	1240	1062	11
3	98	1240	1067	8
4	79	1240	1072	5
Final stroke reduced by	0	Total (+5/-10)	4239	39
Cylinder Mass (Kg)	111.08	Priming Volume		10.7
Rated Pressure (Bar)	175	Total Volume (Litres)		49.7
Maximum Pressure (Bar)	175	Max. first stage thrust		200 KN

***TIPPING CAPACITY AT RATED PRESSURE

d = 0 ; r = 750

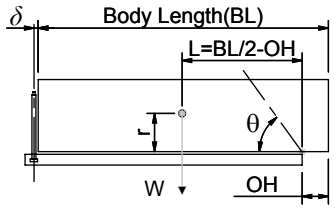

BODY LENGTH (BL)						OH
5500		5750		6000		
26	48°	25	45°	24	43°	150
31	51°	29	48°	27	46°	450
38	55°	34	51°	32	49°	750

Tipping angle (θ)
Body + payload mass,W (tonne)

For guidance only;
Higher Rated Pressures may be possible. To check your application, email Edbro plc at <applications@edbro.co.uk>

NOTES

- If hydraulic pressure is used to limit overloading, the system relief valve must be set to the Rated Pressure unless agreed otherwise by Edbro
- The system relief valve can be set to Maximum Pressure if the load is limited by other means.See RATINGS page for advice
- This cylinder is for lifting purposes only and sideload conditions must be avoided
- Cylinder is painted in primer paint to RAL5013
- See bracket options page BRKT01, BRKT02
- See installation instructions INSTALL01
- Use oil according to specification OIL01

Edbro
SETTING THE INDUSTRY STANDARD

Edbro plc
Nelson Street, Bolton, Lancashire BL3 2JJ UK
Tel +44 (0) 1204 528888 Fax +44 (0) 1204 531957
Email: postmaster@edbro.com Web: www.edbro.com

Technical Specifications are subject to change without notice
Date Created/Updated: 22 December 2009 11:39:41
Refer www.edbro.com to confirm latest specification
All dimensions are in 'mm', unless otherwise stated

Cylinder 4 stage front end with plain eye

CS130E44641B19A01C

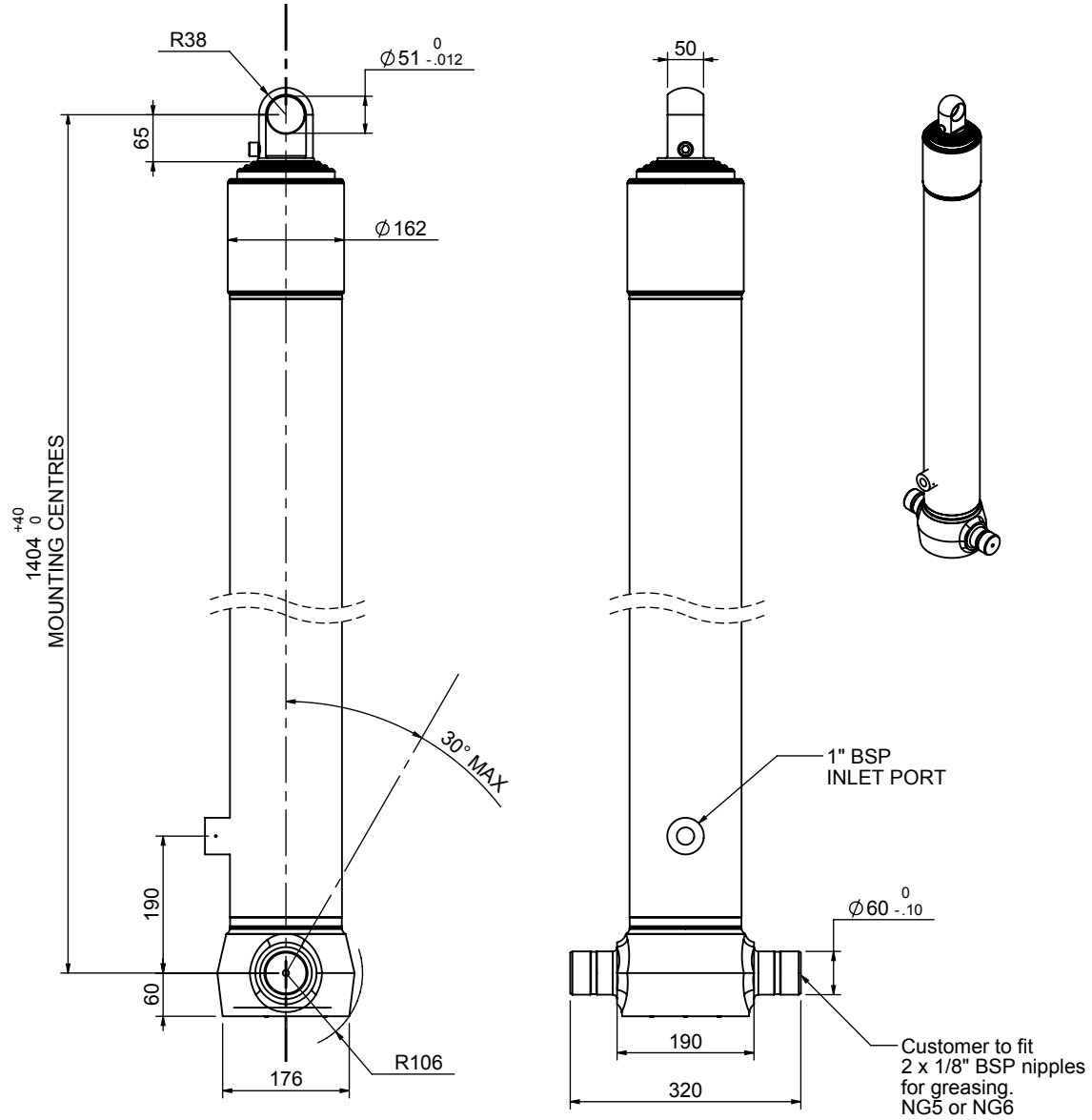

***Include 9mm Pull Out**
All Stages Fully Chromed

SPECIFICATION			RATED CAPACITY : 20-30 TONNES***	
Stage	Diameter	Length	Stroke	Swept Volume
-	-	-	-	-
-	-	-	-	-
0	155	1375	-	-
1	136	1340	1138	17
2	117	1340	1162	12
3	98	1340	1167	9
4	79	1340	1172	6
Final stroke reduced by	0	Total (+5/-10)	4639	44
Cylinder Mass (Kg)	119.21	Priming Volume		11.6
Rated Pressure (Bar)	150	Total Volume (Litres)		55.6
Maximum Pressure (Bar)	175	Max. first stage thrust		200 KN

***TIPPING CAPACITY AT RATED PRESSURE

d = 0 ; r = 750

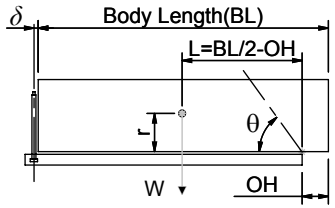

BODY LENGTH (BL)						OH
6000		6250		6500		
22	48°	21	46°	20	44°	150
25	51°	24	48°	23	46°	450
30	54°	27	51°	26	49°	750

Tipping angle (θ)
Body + payload mass,W (tonne)

For guidance only;
Higher Rated Pressures may be possible. To check your application, email Edbro plc at <applications@edbro.co.uk>

NOTES

- If hydraulic pressure is used to limit overloading, the system relief valve must be set to the Rated Pressure unless agreed otherwise by Edbro
- The system relief valve can be set to Maximum Pressure if the load is limited by other means.See RATINGS page for advice
- This cylinder is for lifting purposes only and sideload conditions must be avoided
- Cylinder is painted in primer paint to RAL5013
- See bracket options page BRKT01, BRKT02
- See installation instructions INSTALL01
- Use oil according to specification OIL01

Edbro
SETTING THE INDUSTRY STANDARD

Edbro plc
Nelson Street, Bolton, Lancashire BL3 2JJ UK
Tel +44 (0) 1204 528888 Fax +44 (0) 1204 531957
Email: postmaster@edbro.com Web: www.edbro.com

Technical Specifications are subject to change without notice

Date Created/Updated: 22 December 2009 11:35:46

Refer www.edbro.com to confirm latest specification
All dimensions are in 'mm', unless otherwise stated

Cylinder 4 stage front end with plain eye

CS130E45041B19A01C

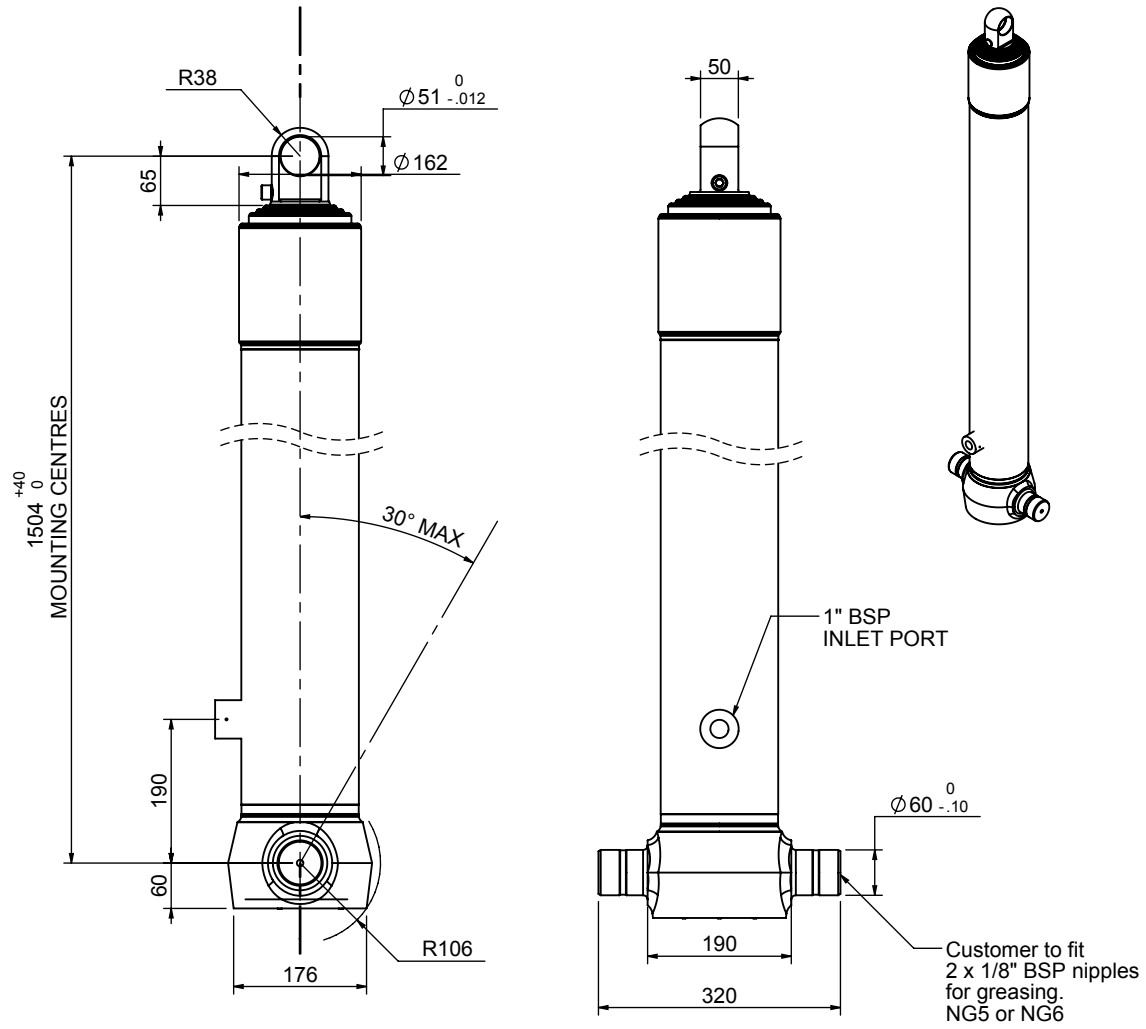

***Include 9mm Pull Out**
All Stages Fully Chromed

SPECIFICATION			RATED CAPACITY : 18-25 TONNES***	
Stage	Diameter	Length	Stroke	Swept Volume
-	-	-	-	-
-	-	-	-	-
0	155	1475	-	-
1	136	1440	1238	18
2	117	1440	1262	14
3	98	1440	1267	10
4	79	1440	1272	6
Final stroke reduced by	0	Total (+5/-10)	5039	48
Cylinder Mass (Kg)	126.58	Priming Volume		12.6
Rated Pressure (Bar)	135	Total Volume (Litres)		60.6
Maximum Pressure (Bar)	175	Max. first stage thrust		200 KN

***TIPPING CAPACITY AT RATED PRESSURE

d = 0 ; r = 750

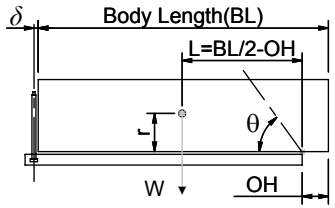

BODY LENGTH (BL)						OH
6500		6750		7000		
19	48°	19	46°	18	44°	150
22	50°	21	48°	20	46°	450
25	53°	23	51°	22	49°	750

Tipping angle (θ)
Body + payload mass,W (tonne)

For guidance only;
Higher Rated Pressures may be possible. To check your application, email Edbro plc at <applications@edbro.co.uk>

NOTES

- If hydraulic pressure is used to limit overloading, the system relief valve must be set to the Rated Pressure unless agreed otherwise by Edbro
- The system relief valve can be set to Maximum Pressure if the load is limited by other means.See RATINGS page for advice
- This cylinder is for lifting purposes only and sideload conditions must be avoided
- Cylinder is painted in primer paint to RAL5013
- See bracket options page BRKT01, BRKT02
- See installation instructions INSTALL01
- Use oil according to specification OIL01

Edbro
SETTING THE INDUSTRY STANDARD

Edbro plc
Nelson Street, Bolton, Lancashire BL3 2JJ UK
Tel +44 (0) 1204 528888 Fax +44 (0) 1204 531957
Email: postmaster@edbro.com Web: www.edbro.com

Technical Specifications are subject to change without notice
Date Created/Updated: 22 December 2009 11:32:36
Refer www.edbro.com to confirm latest specification
All dimensions are in 'mm', unless otherwise stated

Cylinder 4 stage front end with plain eye

CS130E45441B19A01C

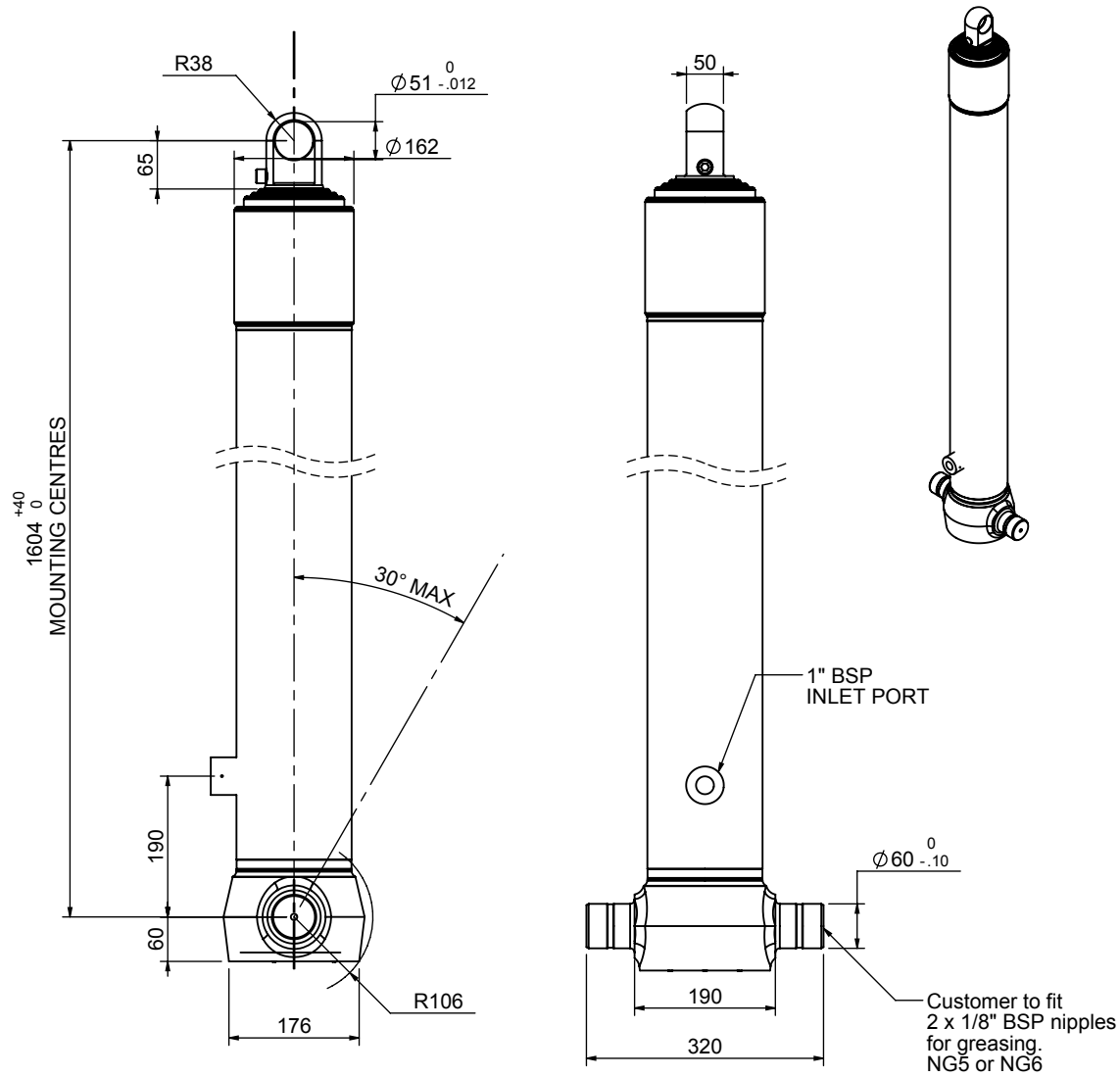

***Include 9mm Pull Out**
All Stages Fully Chromed

SPECIFICATION			RATED CAPACITY : 14-20 TONNES***	
Stage	Diameter	Length	Stroke	Swept Volume
-	-	-	-	-
-	-	-	-	-
0	155	1575	-	-
1	136	1540	1338	19
2	117	1540	1362	15
3	98	1540	1367	10
4	79	1540	1372	7
Final stroke reduced by	0	Total (+5/-10)	5439	51
Cylinder Mass (Kg)	133.95	Priming Volume		13.5
Rated Pressure (Bar)	110	Total Volume (Litres)		64.5
Maximum Pressure (Bar)	175	Max. first stage thrust		200 KN

***TIPPING CAPACITY AT RATED PRESSURE

d = 0 ; r = 750

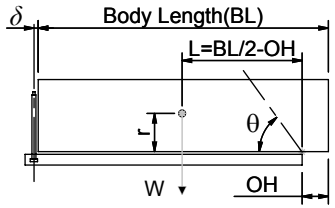

BODY LENGTH (BL)						OH
6750		7250		7750		
16	50°	15	46°	14	43°	150
18	52°	16	48°	15	45°	450
20	55°	18	51°	17	47°	750

Tipping angle (θ)
Body + payload mass,W (tonne)

For guidance only;
Higher Rated Pressures may be possible. To check your application, email Edbro plc at <applications@edbro.co.uk>

NOTES

- If hydraulic pressure is used to limit overloading, the system relief valve must be set to the Rated Pressure unless agreed otherwise by Edbro
- The system relief valve can be set to Maximum Pressure if the load is limited by other means.See RATINGS page for advice
- This cylinder is for lifting purposes only and sideload conditions must be avoided
- Cylinder is painted in primer paint to RAL5013
- See bracket options page BRKT01, BRKT02
- See installation instructions INSTALL01
- Use oil according to specification OIL01

Edbro
SETTING THE INDUSTRY STANDARD

Edbro plc
Nelson Street, Bolton, Lancashire BL3 2JJ UK
Tel +44 (0) 1204 528888 Fax +44 (0) 1204 531957
Email: postmaster@edbro.com Web: www.edbro.com

Technical Specifications are subject to change without notice

Date Created/Updated: 22 December 2009 11:29:22

Refer www.edbro.com to confirm latest specification
All dimensions are in 'mm', unless otherwise stated

Cylinder 4 stage front end with Outer Cover

CS130043841B19A11C

****ALLOW 50mm TO REMOVE CAP FOR SERVICING**

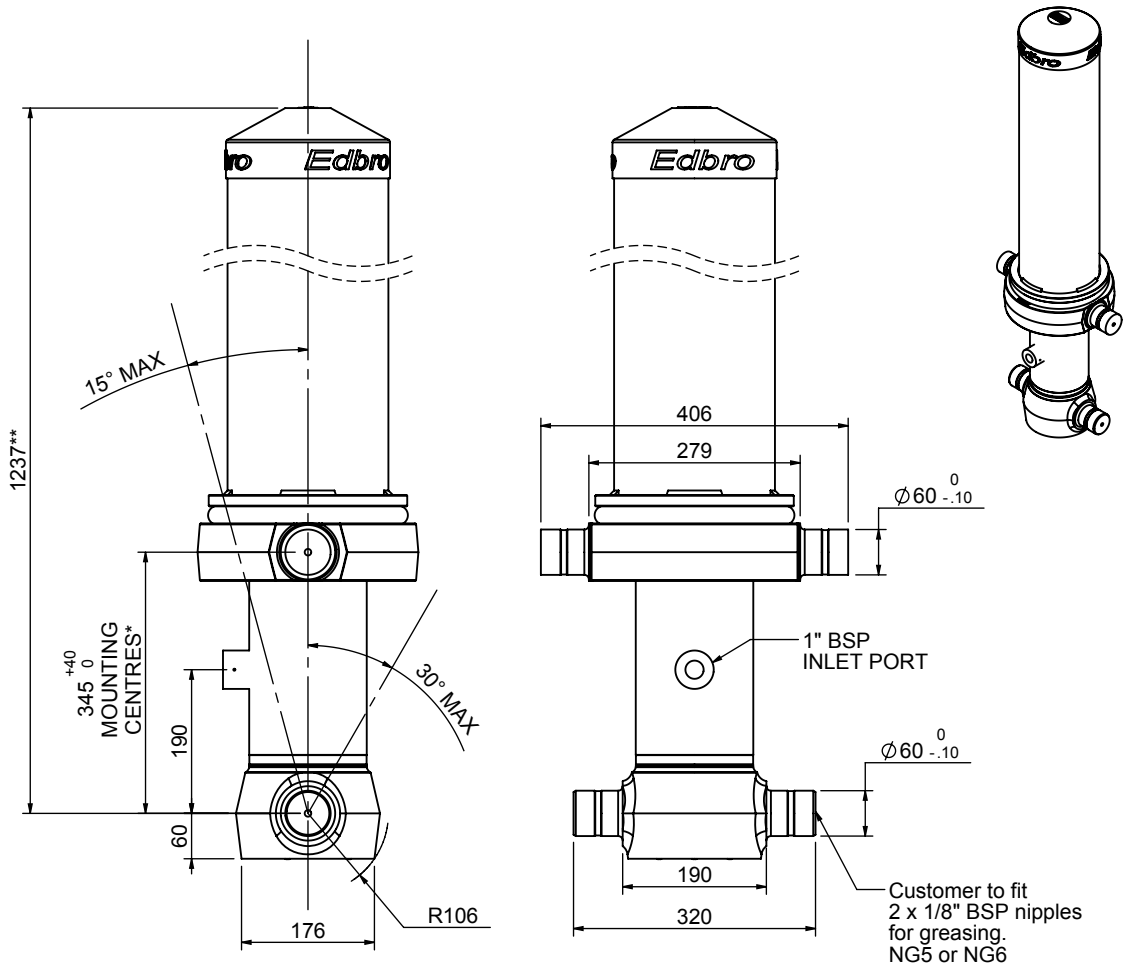

***Include 9mm Pull Out**
All Stage Chrome Plated

SPECIFICATION — RATED CAPACITY : 23-42 TONNES***

Stage	Diameter	Length	Stroke	Swept Volume
-	-	-	-	-
OUTER COVER	213	840	-	-
0	155	1175	-	-
1	136	1140	938	14
2	117	1140	962	10
3	98	1140	967	7
4	79	1140	972	5
Final stroke reduced by	0	Total (+5/-10)	3839	36
Cylinder Mass (Kg)	157.07	Priming Volume		10.2
Rated Pressure (Bar)	150	Total Volume (Litres)		46.2
Maximum Pressure (Bar)	175	Max. first stage thrust		170 KN

***TIPPING CAPACITY AT RATED PRESSURE

d = 178 ; r = 750

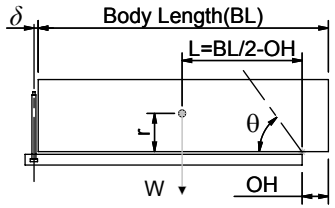

BODY LENGTH (BL)						OH
4750		5000		5250		
25	48°	24	45°	23	43°	150
31	51°	28	48°	26	46°	450
42	55°	36	52°	32	49°	750

Tipping angle (θ)
Body + payload mass,W (tonne)

For guidance only;
Higher Rated Pressures may be possible. To check your application, email Edbro plc at <applications@edbro.co.uk>

NOTES

- If hydraulic pressure is used to limit overloading, the system relief valve must be set to the Rated Pressure unless agreed otherwise by Edbro
- The system relief valve can be set to Maximum Pressure if the load is limited by other means.See RATINGS page for advice
- This cylinder is for lifting purposes only and sideload conditions must be avoided
- Cylinder is painted in primer paint to RAL5013
- See bracket options page BRKT01, BRKT02
- See installation instructions INSTALL01
- Use oil according to specification OIL01

Edbro
SETTING THE INDUSTRY STANDARD

Edbro plc
Nelson Street, Bolton, Lancashire BL3 2JJ UK
Tel +44 (0) 1204 528888 Fax +44 (0) 1204 531957
Email: postmaster@edbro.com Web: www.edbro.com

Technical Specifications are subject to change without notice

Date Created/Updated: 23 December 2009 11:10:28

Refer www.edbro.com to confirm latest specification
All dimensions are in 'mm', unless otherwise stated

Cylinder 5 stage front end with Outer Cover

CS130054068B19A11C

****ALLOW 50mm TO REMOVE CAP FOR SERVICING**

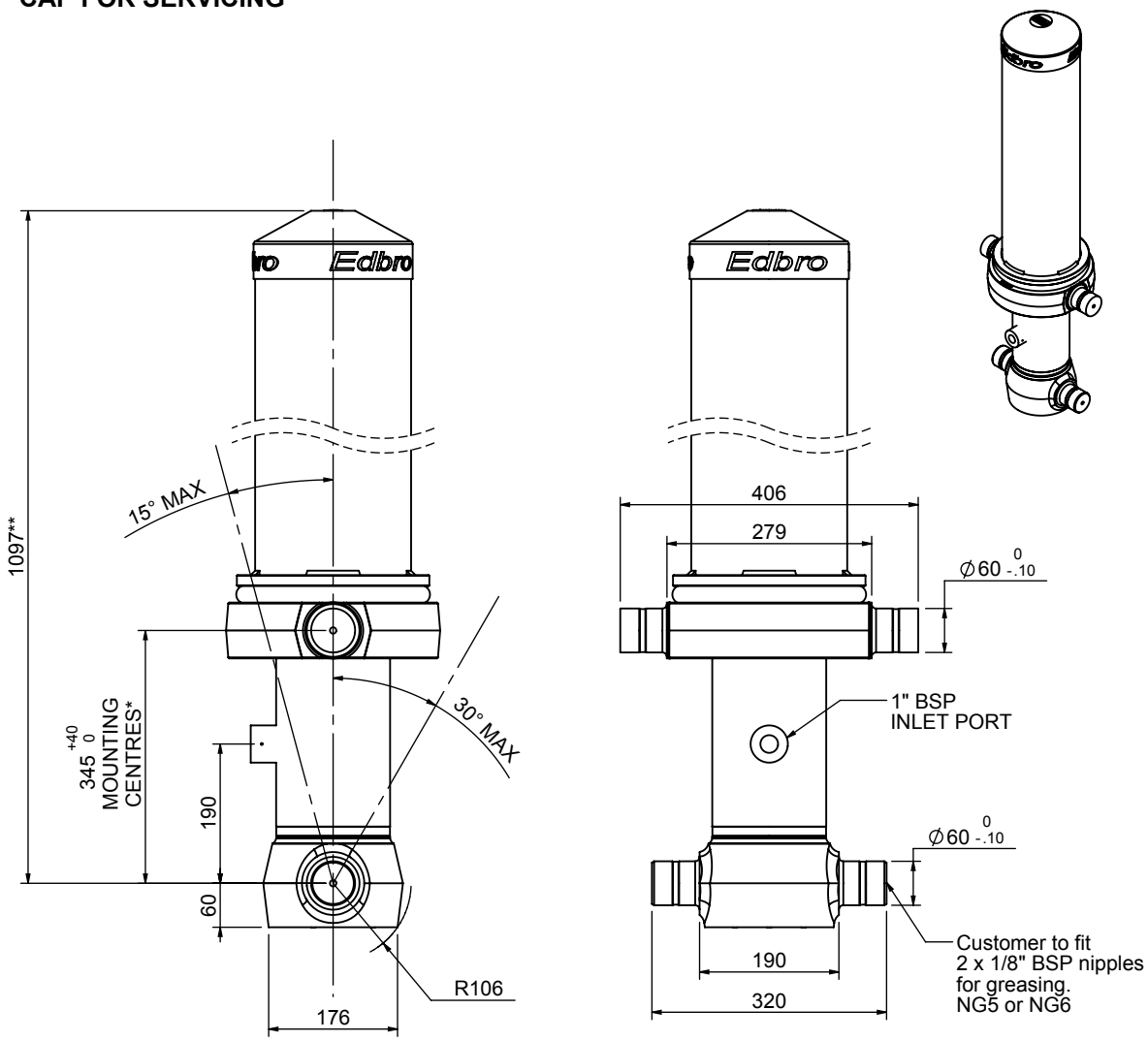

***Include 10mm Pull Out**
All Stages Chrome Plated

SPECIFICATION			RATED CAPACITY : 17-32 TONNES***	
Stage	Diameter	Length	Stroke	Swept Volume
OUTER COVER	213	700	-	-
0	136	1025	-	-
1	136	990	787	11
2	117	990	812	9
3	98	990	817	6
4	79	990	822	4
5	63	990	827	3
Final stroke reduced by	0	Total (+5/-10)	4065	33
Cylinder Mass (Kg)	143.97	Priming Volume		7.7
Rated Pressure (Bar)	175	Total Volume (Litres)		40.7
Maximum Pressure (Bar)	175	Max. first stage thrust		170 KN

***TIPPING CAPACITY AT RATED PRESSURE

d = 178 ; r = 750

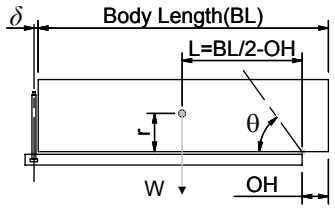

BODY LENGTH (BL)						OH
5000		5250		5500		
20	48°	18	46°	17	43°	150
24	51°	22	49°	20	46°	450
32	55°	28	52°	25	49°	750

Tipping angle (θ)
Body + payload mass,W (tonne)

For guidance only;
Higher Rated Pressures may be possible. To check your application, email Edbro plc at <applications@edbro.co.uk>

NOTES

- If hydraulic pressure is used to limit overloading, the system relief valve must be set to the Rated Pressure unless agreed otherwise by Edbro
- The system relief valve can be set to Maximum Pressure if the load is limited by other means.See RATINGS page for advice
- This cylinder is for lifting purposes only and sideload conditions must be avoided
- Cylinder is painted in primer paint to RAL5013
- See bracket options page BRKT01, BRKT02
- See installation instructions INSTALL01
- Use oil according to specification OIL01

Edbro
SETTING THE INDUSTRY STANDARD

Edbro plc
Nelson Street, Bolton, Lancashire BL3 2JJ UK
Tel +44 (0) 1204 528888 Fax +44 (0) 1204 531957
Email: postmaster@edbro.com Web: www.edbro.com

Technical Specifications are subject to change without notice

Date Created/Updated: 23 December 2009 11:36:14

Refer www.edbro.com to confirm latest specification
All dimensions are in 'mm', unless otherwise stated

Cylinder 5 stage front end with Outer Cover

CS130054568B19A11C

****ALLOW 50mm TO REMOVE CAP FOR SERVICING**

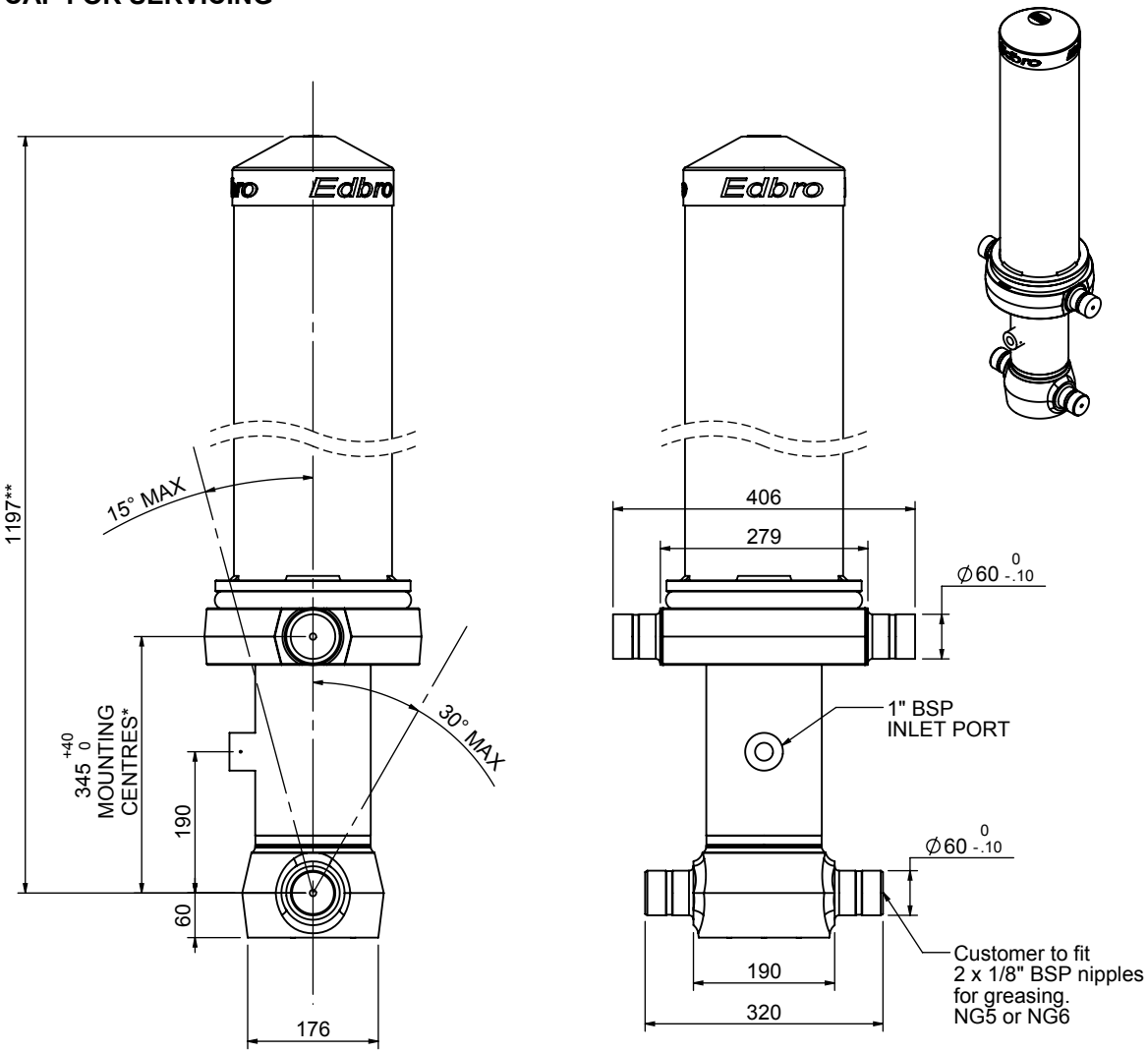

***Include 10mm Pull Out**
All Stages Chrome Plated

SPECIFICATION			RATED CAPACITY : 17-26 TONNES***	
Stage	Diameter	Length	Stroke	Swept Volume
OUTER COVER	213	800	-	-
0	136	1125	-	-
1	136	1090	887	13
2	117	1090	912	10
3	98	1090	917	7
4	79	1090	922	5
5	63	1090	927	3
Final stroke reduced by	0	Total (+5/-10)	4565	38
Cylinder Mass (Kg)	154.00	Priming Volume		8.5
Rated Pressure (Bar)	175	Total Volume (Litres)		46.5
Maximum Pressure (Bar)	175	Max. first stage thrust		170 KN

***TIPPING CAPACITY AT RATED PRESSURE

d = 178 ; r = 750

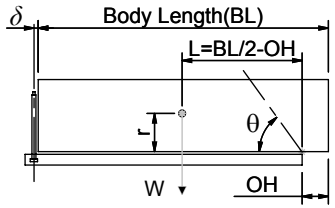

BODY LENGTH (BL)						OH
5750		6000		6250		
18	47°	17	45°	17	43°	150
21	50°	20	47°	19	45°	450
26	53°	23	50°	22	48°	750

Tipping angle (θ)
Body + payload mass,W (tonne)

For guidance only;
Higher Rated Pressures may be possible. To check your application, email Edbro plc at <applications@edbro.co.uk>

NOTES

- If hydraulic pressure is used to limit overloading, the system relief valve must be set to the Rated Pressure unless agreed otherwise by Edbro
- The system relief valve can be set to Maximum Pressure if the load is limited by other means.See RATINGS page for advice
- This cylinder is for lifting purposes only and sideload conditions must be avoided
- Cylinder is painted in primer paint to RAL5013
- See bracket options page BRKT01, BRKT02
- See installation instructions INSTALL01
- Use oil according to specification OIL01

Edbro
SETTING THE INDUSTRY STANDARD

Edbro plc
Nelson Street, Bolton, Lancashire BL3 2JJ UK
Tel +44 (0) 1204 528888 Fax +44 (0) 1204 531957
Email: postmaster@edbro.com Web: www.edbro.com

Technical Specifications are subject to change without notice

Date Created/Updated: 23 December 2009 08:18:23

Refer www.edbro.com to confirm latest specification
All dimensions are in 'mm', unless otherwise stated

Cylinder 4 stage front end with Outer Cover

CS130044641B19A11C

****ALLOW 50mm TO REMOVE CAP FOR SERVICING**

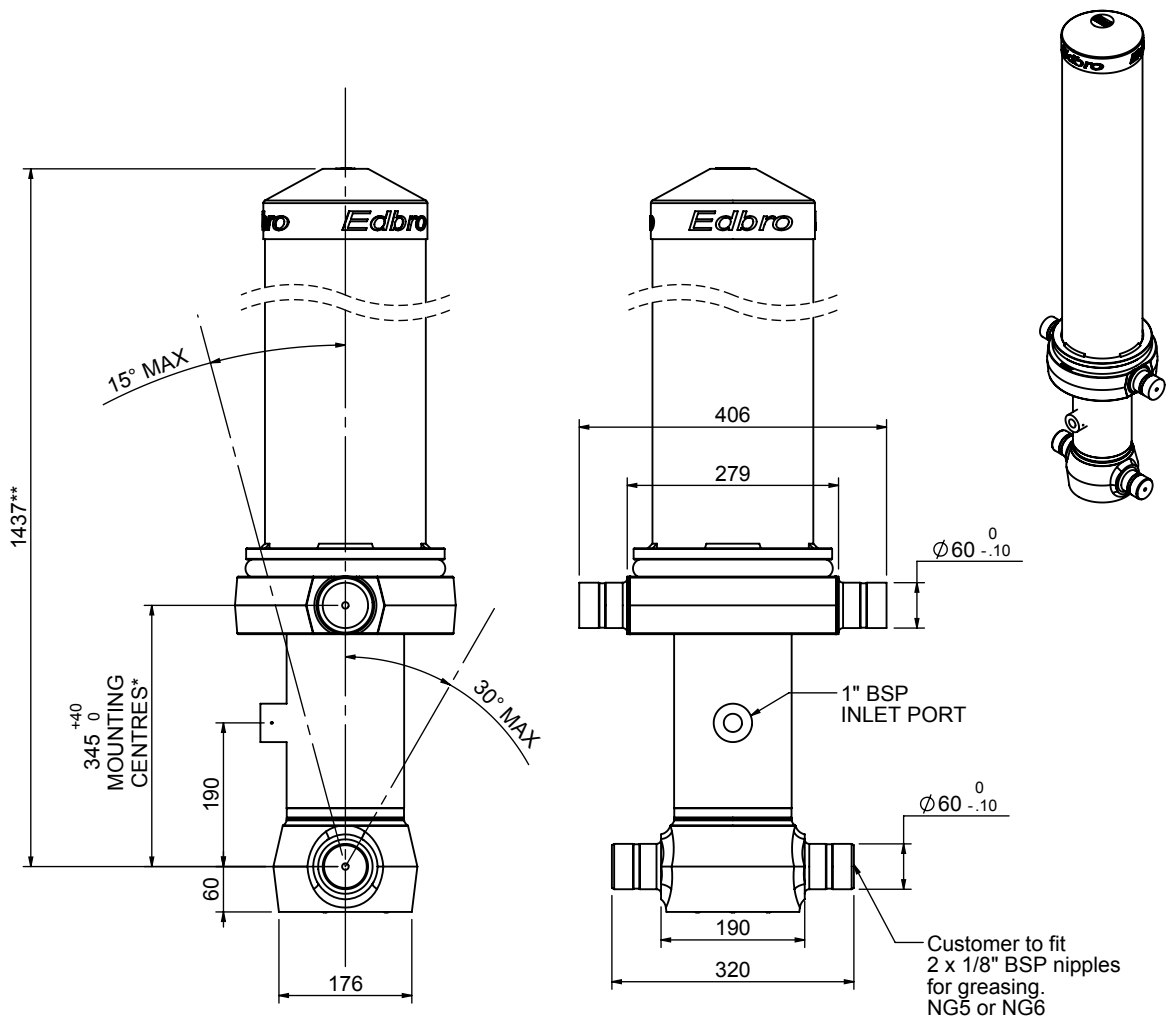

***Include 9mm Pull Out**
All Stages Fully Chromed

SPECIFICATION — RATED CAPACITY : 25-38 TONNES***

Stage	Diameter	Length	Stroke	Swept Volume
-	-	-	-	-
OUTER COVER	213	1040	-	-
0	155	1375	-	-
1	136	1340	1138	17
2	117	1340	1162	12
3	98	1340	1167	9
4	79	1340	1172	6
Final stroke reduced by	0	Total (+5/-10)	4639	44
Cylinder Mass (Kg)	167.87	Priming Volume		11.6
Rated Pressure (Bar)	175	Total Volume (Litres)		55.6
Maximum Pressure (Bar)	175	Max. first stage thrust		170 KN

***TIPPING CAPACITY AT RATED PRESSURE

d = 178 ; r = 750

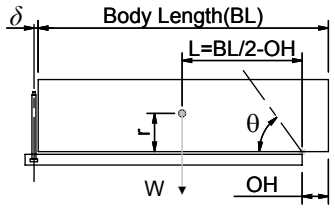

BODY LENGTH (BL)						OH
5750		6000		6250		
27	48°	26	46°	25	44°	150
32	50°	30	48°	28	46°	450
38	54°	35	51°	33	49°	750

Tipping angle (θ)
Body + payload mass,W (tonne)

For guidance only;
Higher Rated Pressures may be possible. To check your application, email Edbro plc at <applications@edbro.co.uk>

NOTES

- If hydraulic pressure is used to limit overloading, the system relief valve must be set to the Rated Pressure unless agreed otherwise by Edbro
- The system relief valve can be set to Maximum Pressure if the load is limited by other means.See RATINGS page for advice
- This cylinder is for lifting purposes only and sideload conditions must be avoided
- Cylinder is painted in primer paint to RAL5013
- See bracket options page BRKT01, BRKT02
- See installation instructions INSTALL01
- Use oil according to specification OIL01

Edbro
SETTING THE INDUSTRY STANDARD

Edbro plc
Nelson Street, Bolton, Lancashire BL3 2JJ UK
Tel +44 (0) 1204 528888 Fax +44 (0) 1204 531957
Email: postmaster@edbro.com Web: www.edbro.com

Technical Specifications are subject to change without notice

Date Created/Updated: 23 December 2009 12:43:10

Refer www.edbro.com to confirm latest specification
All dimensions are in 'mm', unless otherwise stated

Cylinder 4 stage front end with Outer Cover

CS130045041B19A11C

****ALLOW 50mm TO REMOVE CAP FOR SERVICING**

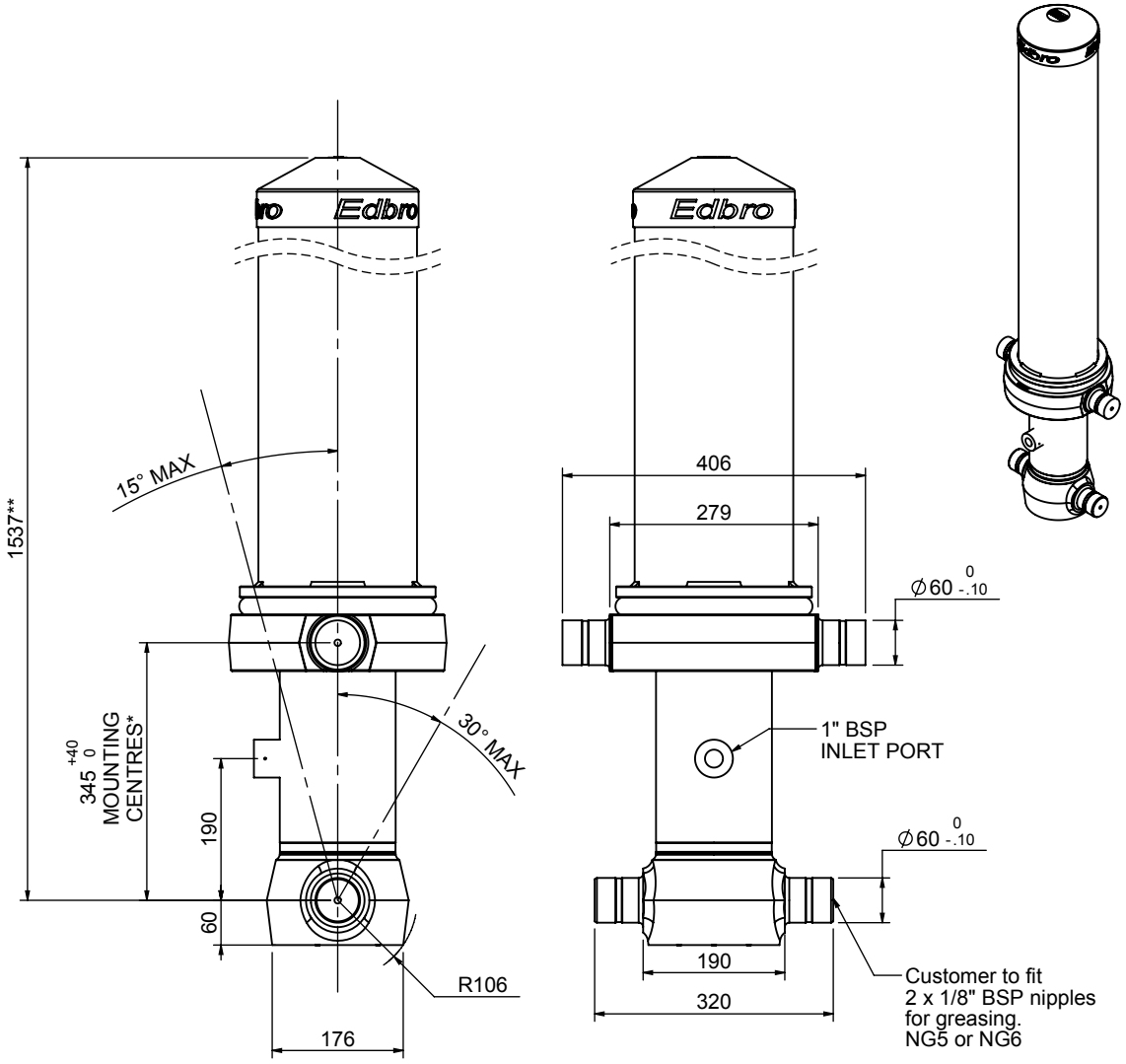

***Include 9mm Pull Out**
All Stages Chrome Plated

SPECIFICATION — RATED CAPACITY : 24-38 TONNES***

Stage	Diameter	Length	Stroke	Swept Volume
-	-	-	-	-
OUTER COVER	213	1140	-	-
0	155	1475	-	-
1	136	1440	1238	18
2	117	1440	1262	14
3	98	1440	1267	10
4	79	1440	1272	6
Final stroke reduced by	0	Total (+5/-10)	5039	48
Cylinder Mass (Kg)	176.2	Priming Volume		12.6
Rated Pressure (Bar)	175	Total Volume (Litres)		60.6
Maximum Pressure (Bar)	175	Max. first stage thrust		170 KN

***TIPPING CAPACITY AT RATED PRESSURE

d = 178 ; r = 750

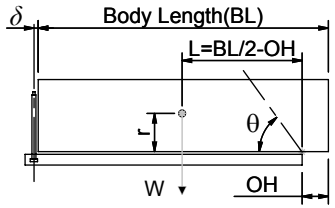

BODY LENGTH (BL)						OH
6000		6500		7000		
28	50°	26	46°	24	42°	150
32	53°	29	48°	27	44°	450
38	56°	33	51°	30	46°	750

Tipping angle (θ)
Body + payload mass,W (tonne)

For guidance only;
Higher Rated Pressures may be possible. To check your application, email Edbro plc at <applications@edbro.co.uk>

NOTES

- If hydraulic pressure is used to limit overloading, the system relief valve must be set to the Rated Pressure unless agreed otherwise by Edbro
- The system relief valve can be set to Maximum Pressure if the load is limited by other means.See RATINGS page for advice
- This cylinder is for lifting purposes only and sideload conditions must be avoided
- Cylinder is painted in primer paint to RAL5013
- See bracket options page BRKT01, BRKT02
- See installation instructions INSTALL01
- Use oil according to specification OIL01

Edbro
SETTING THE INDUSTRY STANDARD

Edbro plc
Nelson Street, Bolton, Lancashire BL3 2JJ UK
Tel +44 (0) 1204 528888 Fax +44 (0) 1204 531957
Email: postmaster@edbro.com Web: www.edbro.com

Technical Specifications are subject to change without notice

Date Created/Updated: 23 December 2009 12:53:54

Refer www.edbro.com to confirm latest specification
All dimensions are in 'mm', unless otherwise stated

Cylinder 4 stage front end with outer cover

CS130045441B19A31C

****ALLOW 50mm TO REMOVE CAP FOR SERVICING**

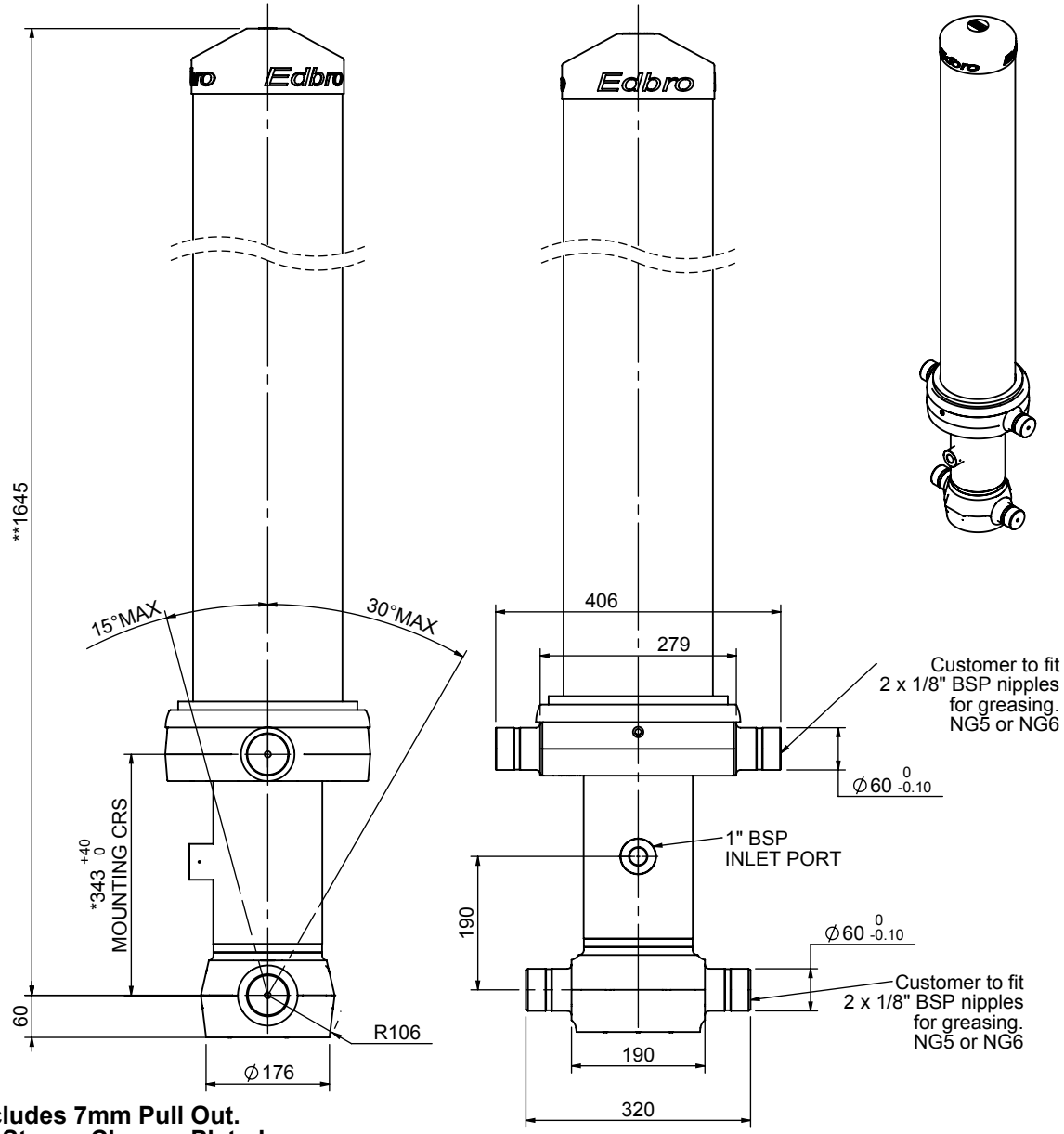

***Includes 7mm Pull Out.**
All Stages Chrome Plated

SPECIFICATION — TIPPING CAPACITY : 23-33 TONNES***

Stage	Diameter	Length	Stroke	Swept Volume
-	-	-	-	-
OUTER COVER	∅213	1260	-	-
0	∅155	1575	-	-
1	∅136	1540	1340	19
2	∅117	1540	1362	15
3	∅98	1540	1367	10
4	∅79	1540	1372	7
		Total (+5/-10)	5441	51
Final stroke reduced by	0	Priming Volume		14
Cylinder Mass (Kg)	189	Total Volume (Litres)		65
Maximum Pressure (Bar)	190	Max. first stage thrust		170 KN

***TIPPING CAPACITY AT WORKING PRESSURE

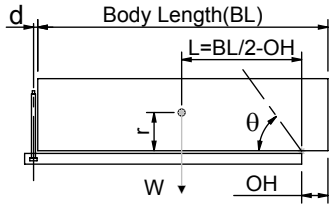

BODY LENGTH (BL)						OH
6750		7250		7750		
26	48°	25	44°	23	41°	150
29	50°	27	46°	25	43°	450
33	53°	30	48°	28	45°	750

Tipping angle (θ)
Body + payload mass,W (tonne)

d = 178; r = 750; Working Pressure 175 bar

For guidance only;
Higher working pressures and tipping capacities may be possible.
To check your application email - applications@edbro.co.uk

NOTES

1. This cylinder is for lifting purposes only and side load conditions should be avoided
2. Cylinder is painted in primer paint to RAL5013
3. Refer to www.edbro.com for;-
   - Bracket details
   - Installation instructions that must be observed
   - Correct oil selection
   - An explanation of tipping capacity

JOST UK Ltd
Edbro House, Nelson Street, Bolton, England, BL3 2JJ
Tel +44 (0) 1204 528888 Fax +44 (0) 1204 531957
Email: sales@jost-world.com Web: www.edbro.com

Technical Specifications are subject to change without notice

Date Created/Updated: 01 December 2017

Refer www.edbro.com to confirm latest specification
All dimensions are in 'mm', unless otherwise stated

Cylinder 5 stage front end with plain eye

CS150E54778B19A01C

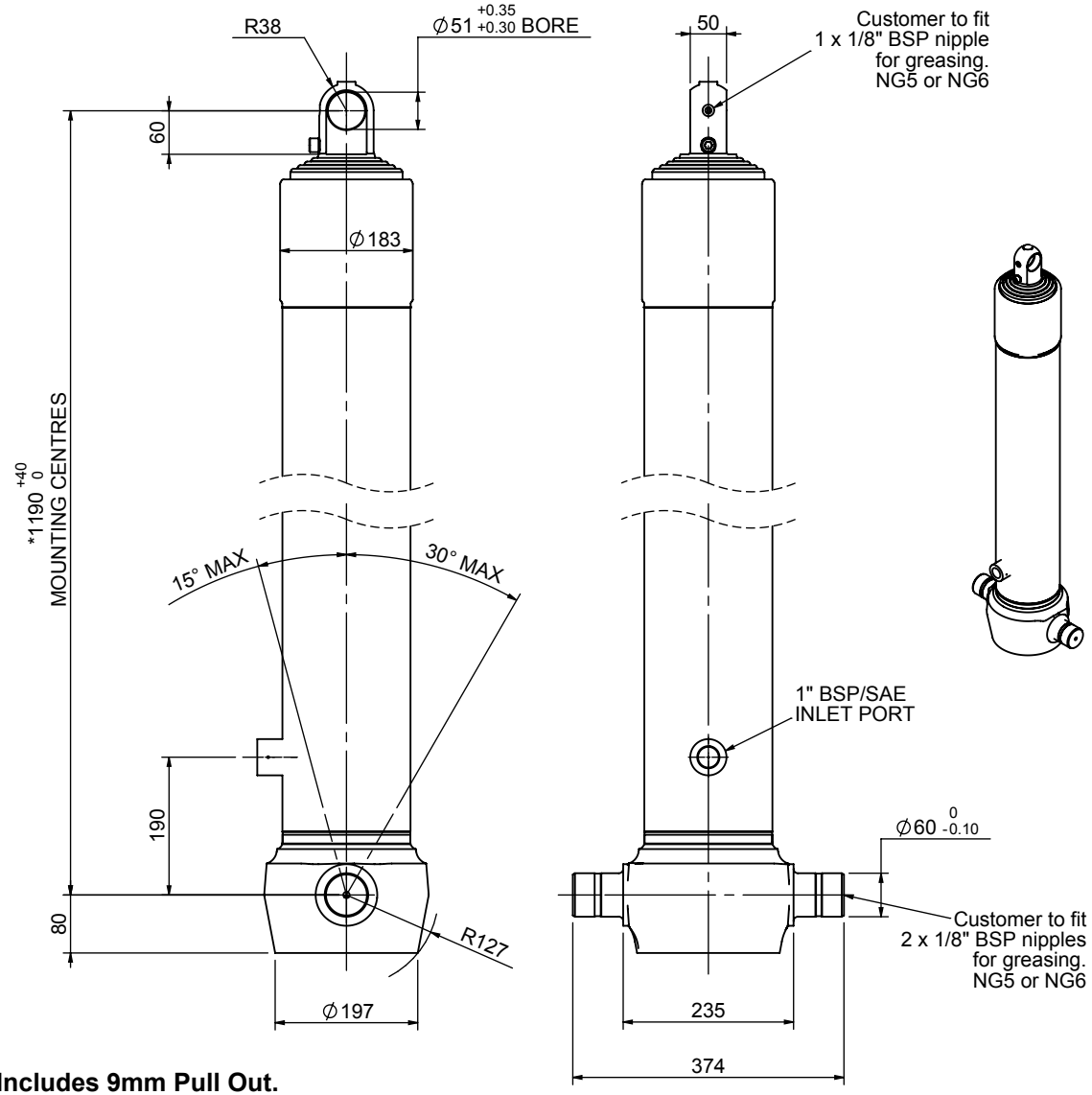

***Includes 9mm Pull Out.**
All Stages Chrome Plated

SPECIFICATION		TIPPING CAPACITY : 25-38 TONNES***		
Stage	Diameter	Length	Stroke	Swept Volume
-	-	-	-	-
0	177	1175	-	-
1	155	1140	927	17
2	136	1140	947	14
3	117	1140	962	10
4	98	1140	967	7
5	80	1140	972	5
		Total (+5/-10)	4775	53
Final stroke reduced by	0	Priming Volume		12
Cylinder Mass (Kg)	148	Total Volume (Litres)		65
Maximum Pressure (Bar)	190	Max. first stage thrust		225 KN

***TIPPING CAPACITY AT WORKING PRESSURE

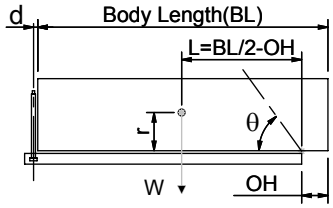

BODY LENGTH (BL)						OH
6050		6300		6550		
27	49°	26	47°	25	45°	150
31	52°	30	49°	28	47°	450
38	55°	35	52°	32	50°	750

Tipping angle (θ)

Body + payload mass,W (tonne)

d = 0; r = 750; Working Pressure 175 bar

For guidance only;
Higher working pressures and tipping capacities may be possible.
To check your application email - applications@edbro.co.uk

NOTES

1. This cylinder is for lifting purposes only and side load conditions should be avoided
2. Cylinder is painted in primer paint to RAL5013
3. Refer to www.edbro.com for;-
   - Bracket details
   - Installation instructions that must be observed
   - Correct oil selection
   - An explanation of tipping capacity

Edbro
SETTING THE INDUSTRY STANDARD

Edbro plc
Nelson Street, Bolton, England, BL3 2JJ
Tel +44 (0) 1204 528888 Fax +44 (0) 1204 531957
Email: postmaster@edbro.com Web: www.edbro.com

Technical Specifications are subject to change without notice

Date Created/Updated: 04 September 2012

Refer www.edbro.com to confirm latest specification
All dimensions are in 'mm', unless otherwise stated

Cylinder Outline Drawing

CS150E54778B19A01C

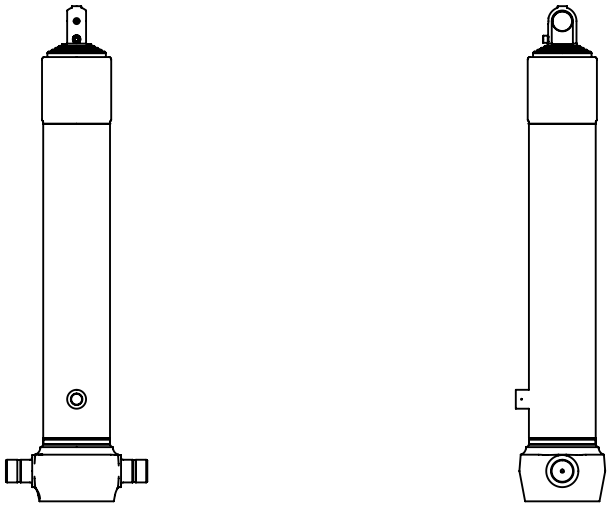

CS150E54778B19A01C

Edbro plc
Nelson Street, Bolton, Lancashire BL3 2JJ UK
Tel +44 (0) 1204 528888 Fax +44 (0) 1204 531957
Email: postmaster@edbro.com Web: www.edbro.com

SETTING THE INDUSTRY STANDARD

Technical Specifications are subject to change without notice

Date Created/Updated: 04 September 2012

Scale: 1:20

Cylinder 5 stage front end with plain eye

CS150E55278B19A01C

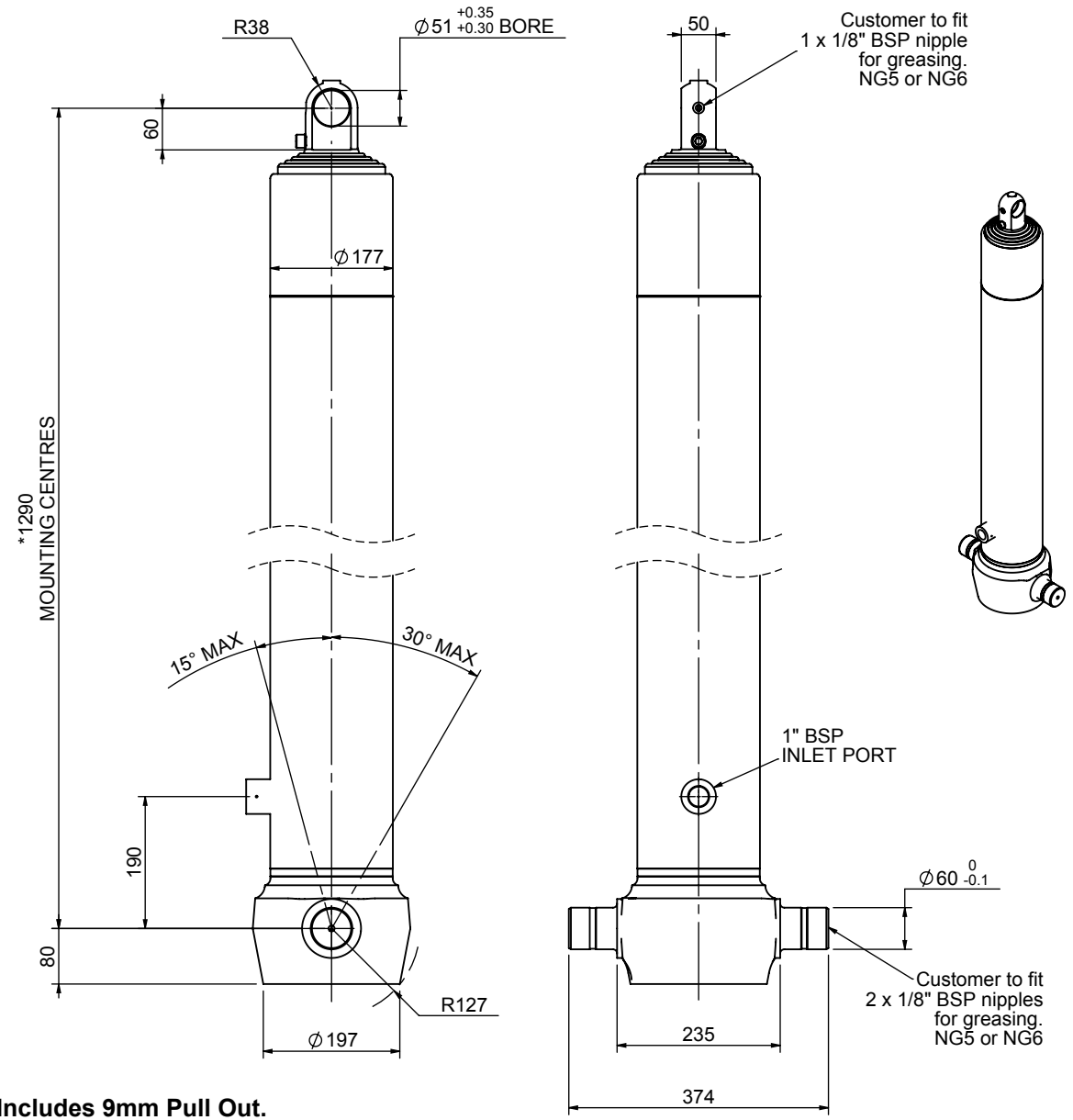

***Includes 9mm Pull Out.**
All Stages Chrome Plated

SPECIFICATION		TIPPING CAPACITY : 25-38 TONNES***		
Stage	Diameter	Length	Stroke	Swept Volume
-	-	-	-	-
0	177	1275	-	-
1	155	1240	1027	19
2	136	1240	1047	15
3	117	1240	1062	11
4	98	1240	1067	8
5	79	1240	1072	5
		Total (+5/-10)	5275	58
Final stroke reduced by		Priming Volume		12
Cylinder Mass (Kg)	155	Total Volume (Litres)		70
Maximum Pressure (Bar)	190	Max. first stage thrust		225 KN

***TIPPING CAPACITY AT WORKING PRESSURE

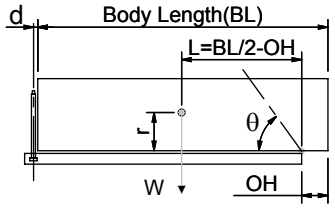

BODY LENGTH (BL)						OH
6600		6850		7100		
24	49°	23	47°	22	45°	150
27	52°	25	49°	24	48°	450
31	55°	29	52°	28	50°	750

Tipping angle (θ)
Body + payload mass,W (tonne)

d = 0; r = 750; Working Pressure 155 bar

For guidance only;
Higher working pressures and tipping capacities may be possible.
To check your application email - applications@edbro.co.uk

NOTES

1. This cylinder is for lifting purposes only and side load conditions should be avoided
2. Cylinder is painted in primer paint to RAL5013
3. Refer to www.edbro.com for;-
   - Bracket details
   - Installation instructions that must be observed
   - Correct oil selection
   - An explanation of tipping capacity

Edbro
SETTING THE INDUSTRY STANDARD

Edbro plc
Nelson Street, Bolton, England, BL3 2JJ
Tel +44 (0) 1204 528888 Fax +44 (0) 1204 531957
Email: postmaster@edbro.com Web: www.edbro.com

Technical Specifications are subject to change without notice

Date Created/Updated: 19 July 2013

Refer www.edbro.com to confirm latest specification
All dimensions are in 'mm', unless otherwise stated

Cylinder Outline Drawing

CS150E55278B19A01C

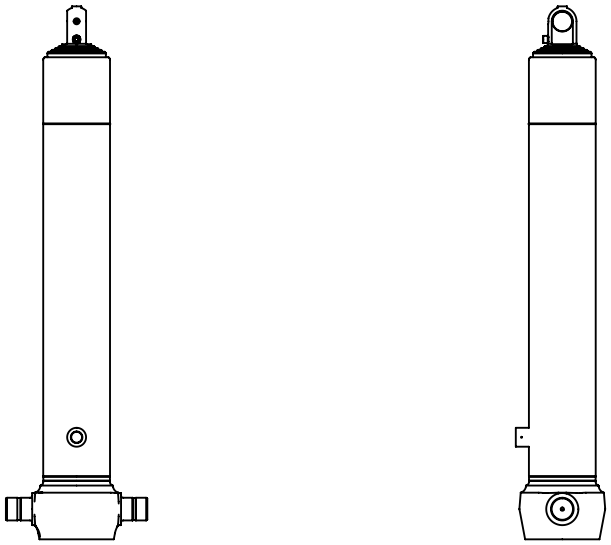

CS150E55278B19A01C

Edbro plc
Nelson Street, Bolton, Lancashire BL3 2JJ UK
Tel +44 (0) 1204 528888 Fax +44 (0) 1204 531957
Email: postmaster@edbro.com Web: www.edbro.com

SETTING THE INDUSTRY STANDARD

Technical Specifications are subject to change without notice

Date Created/Updated: 19 July 2013

Scale: 1:20

Cylinder 4 stage front end with plain eye

CS150E45406B19A01C

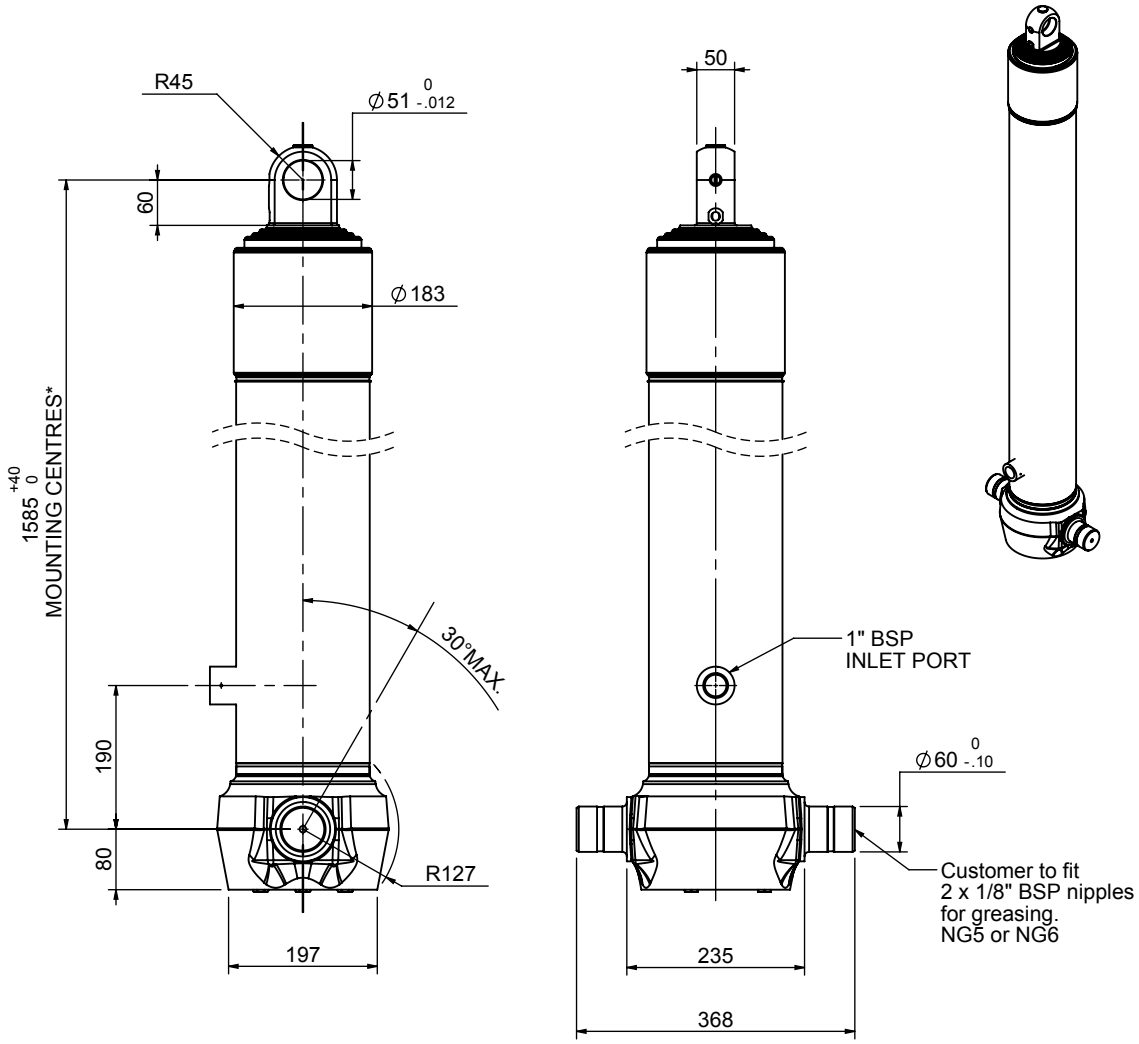

***Include 9mm Pull Out**
All stages Chrome Plated

SPECIFICATION — RATED CAPACITY : 27-38 TONNES***

Stage	Diameter	Length	Stroke	Swept Volume
-	-	-	-	-
-	-	-	-	-
0	177	1575	-	-
1	155	1540	1327	25
2	136	1540	1347	20
3	117	1540	1362	15
4	98	1540	1367	10
Final stroke reduced by	0	Total (+5/-10)	5403	70
Cylinder Mass (Kg)	179.24	Priming Volume		17.6
Rated Pressure (Bar)	135	Total Volume (Litres)		87.6
Maximum Pressure (Bar)	175	Max. first stage thrust		230 KN

***TIPPING CAPACITY AT RATED PRESSURE

d = 0 ; r = 750

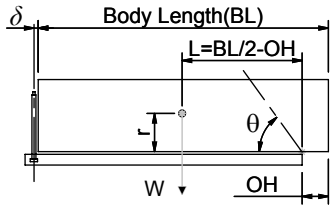

BODY LENGTH (BL)						OH
6750		7250		7750		
30	49°	28	46°	27	42°	150
33	52°	31	48°	29	44°	450
38	55°	34	50°	32	46°	750

Tipping angle (θ)
Body + payload mass,W (tonne)

For guidance only;
Higher Rated Pressures may be possible. To check your application, email Edbro plc at <applications@edbro.co.uk>

NOTES

- If hydraulic pressure is used to limit overloading, the system relief valve must be set to the Rated Pressure unless agreed otherwise by Edbro
- The system relief valve can be set to Maximum Pressure if the load is limited by other means.See RATINGS page for advice
- This cylinder is for lifting purposes only and sideload conditions must be avoided
- Cylinder is painted in primer paint to RAL5013
- See bracket options page BRKT01, BRKT02
- See installation instructions INSTALL01
- Use oil according to specification OIL01

Edbro
SETTING THE INDUSTRY STANDARD

Edbro plc
Nelson Street, Bolton, Lancashire BL3 2JJ UK
Tel +44 (0) 1204 528888 Fax +44 (0) 1204 531957
Email: postmaster@edbro.com Web: www.edbro.com

Technical Specifications are subject to change without notice

Date Created/Updated: 19 November 2009 09:33:42

Refer www.edbro.com to confirm latest specification
All dimensions are in 'mm', unless otherwise stated

Cylinder 5 stage front end with plain eye

CS150E55778B19A01C

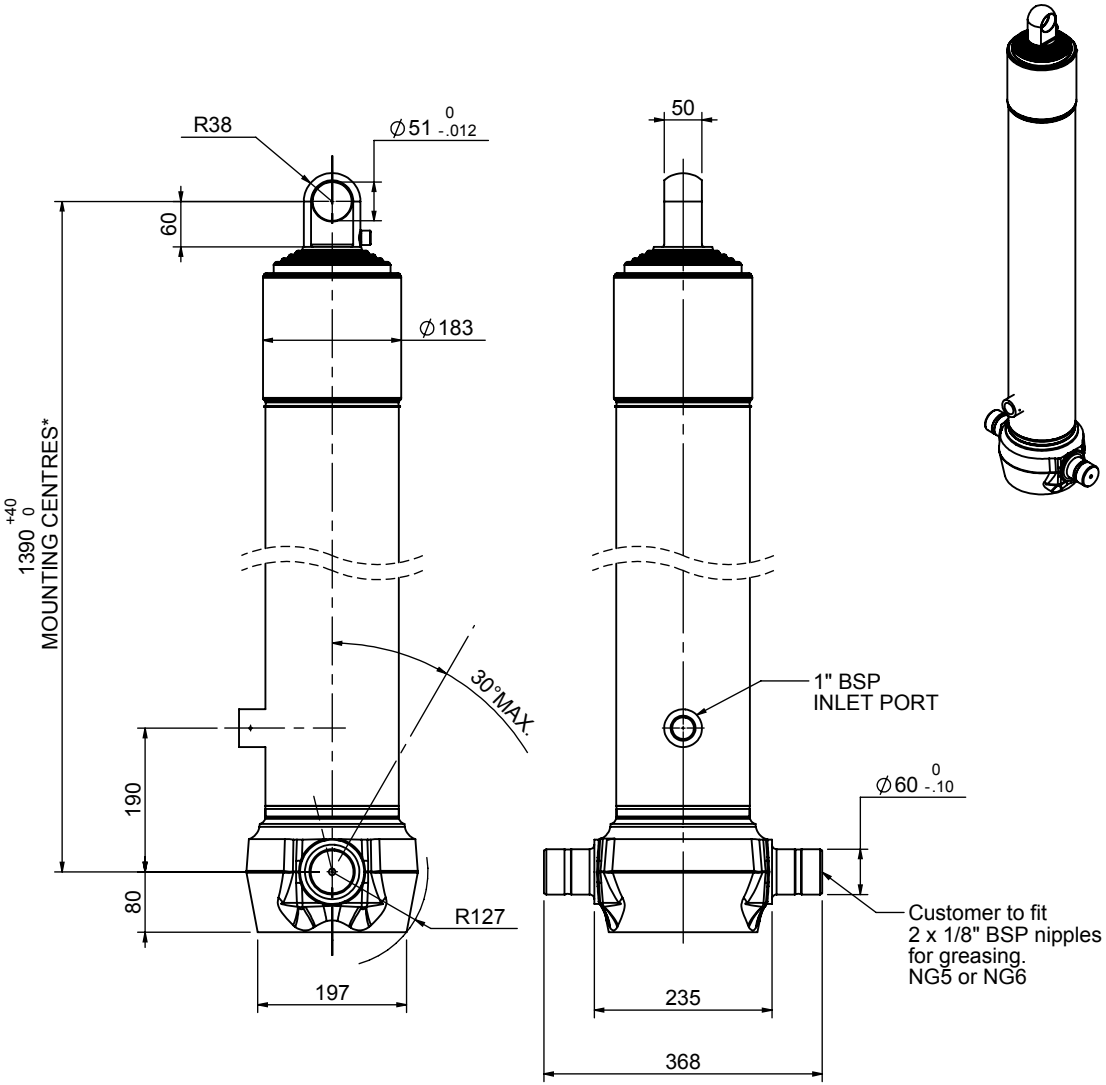

***Include 9mm Pull Out**
All Stages Chrome Plated

SPECIFICATION			RATED CAPACITY : 20-27 TONNES***	
Stage	Diameter	Length	Stroke	Swept Volume
-	-	-	-	-
0	177	-	-	-
1	155	1375	1127	-
2	136	1340	1147	17
3	117	1340	1162	12
4	102	1340	1167	10
5	79.74	1340	1172	6
Final stroke reduced by	0	Total (+5/-10)	5775	45
Cylinder Mass (Kg)	167.16	Priming Volume		13.9
Rated Pressure (Bar)	135	Total Volume (Litres)		58.9
Maximum Pressure (Bar)	175	Max. first stage thrust		230 KN

***TIPPING CAPACITY AT RATED PRESSURE

d = 0 ; r = 750

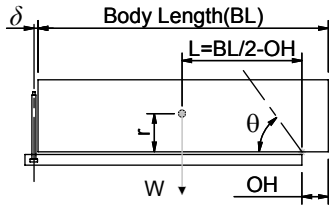

BODY LENGTH (BL)						OH
7250		7500		7750		
20	49°	19	47°	19	45°	150
22	51°	21	49°	21	47°	450
25	54°	24	52°	23	50°	750

Tipping angle (θ)
Body + payload mass,W (tonne)

For guidance only;
Higher Rated Pressures may be possible. To check your application, email Edbro plc at <applications@edbro.co.uk>

NOTES

- If hydraulic pressure is used to limit overloading, the system relief valve must be set to the Rated Pressure unless agreed otherwise by Edbro
- The system relief valve can be set to Maximum Pressure if the load is limited by other means.See RATINGS page for advice
- This cylinder is for lifting purposes only and sideload conditions must be avoided
- Cylinder is painted in primer paint to RAL5013
- See bracket options page BRKT01, BRKT02
- See installation instructions INSTALL01
- Use oil according to specification OIL01

Edbro
SETTING THE INDUSTRY STANDARD

Edbro plc
Nelson Street, Bolton, Lancashire BL3 2JJ UK
Tel +44 (0) 1204 528888 Fax +44 (0) 1204 531957
Email: postmaster@edbro.com Web: www.edbro.com

Technical Specifications are subject to change without notice

Date Created/Updated: 05 March 2010 11:48:46

Refer www.edbro.com to confirm latest specification
All dimensions are in 'mm', unless otherwise stated

Cylinder 4 stage front end with plain eye

CS150E45806B19A01

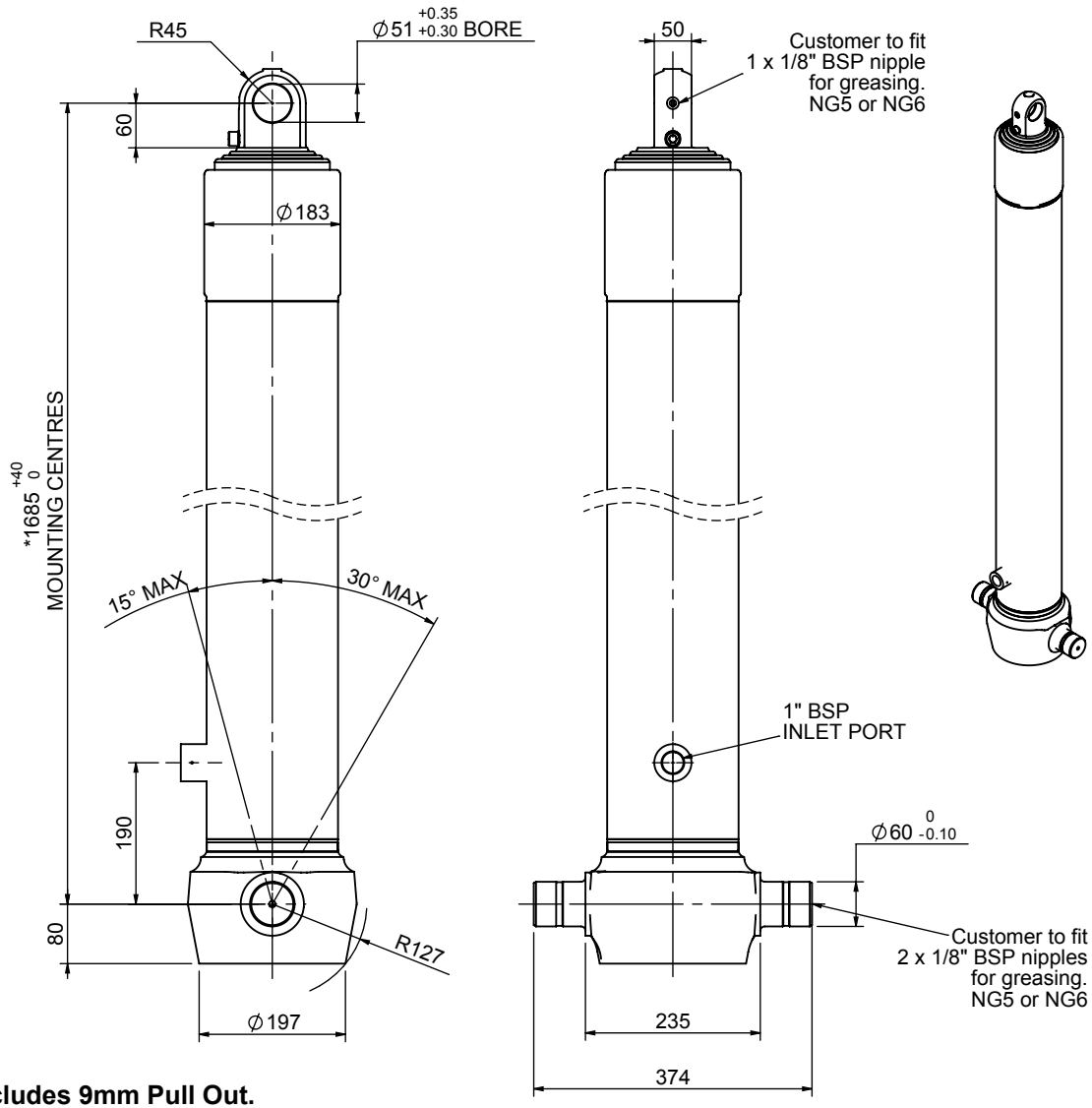

***Includes 9mm Pull Out.**
Last Stage Chrome Plated

SPECIFICATION		TIPPING CAPACITY : 24-32 TONNES***		
Stage	Diameter	Length	Stroke	Swept Volume
-	-	-	-	-
-	-	-	-	-
0	177	1675	-	-
1	155	1640	1427	27
2	136	1640	1447	21
3	117	1640	1462	16
4	98	1640	1467	11
		Total (+5/-10)	5803	75
Final stroke reduced by	0	Priming Volume		19
Cylinder Mass (Kg)	185	Total Volume (Litres)		94
Maximum Pressure (Bar)	190	Max. first stage thrust		225 KN

***TIPPING CAPACITY AT WORKING PRESSURE

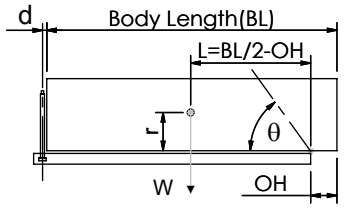

BODY LENGTH (BL)						OH
7250		7750		8250		
26	49°	25	46°	24	43°	150
29	52°	27	48°	26	44°	450
32	55°	30	50°	28	46°	750

Tipping angle (θ)

Body + payload mass,W (tonne)

d = 0; r = 750; Working Pressure 120 bar

For guidance only;
Higher working pressures and tipping capacities may be possible.
To check your application email - applications@edbro.co.uk

NOTES

1. This cylinder is for lifting purposes only and side load conditions should be avoided
2. Cylinder is painted in primer paint to RAL5013
3. Refer to www.edbro.com for;-
   - Bracket details
   - Installation instructions that must be observed
   - Correct oil selection
   - An explanation of tipping capacity

Edbro
SETTING THE INDUSTRY STANDARD

Edbro plc
Nelson Street, Bolton, England, BL3 2JJ
Tel +44 (0) 1204 528888 Fax +44 (0) 1204 531957
Email: postmaster@edbro.com Web: www.edbro.com

Technical Specifications are subject to change without notice
Date Created/Updated: 18 July 2012
Refer www.edbro.com to confirm latest specification
All dimensions are in 'mm', unless otherwise stated

Cylinder Outline Drawing

CS150E45806B19A01

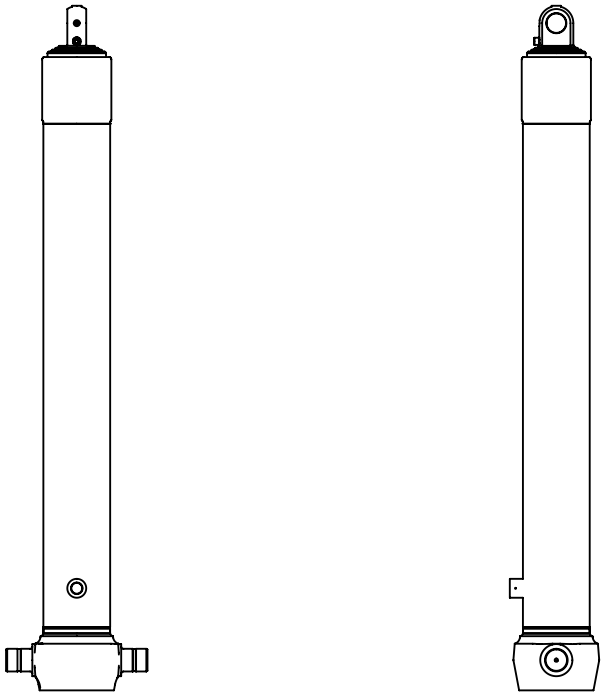

CS150E45806B19A01

Edbro plc
Nelson Street, Bolton, Lancashire BL3 2JJ UK
Tel +44 (0) 1204 528888 Fax +44 (0) 1204 531957
Email: postmaster@edbro.com Web: www.edbro.com

SETTING THE INDUSTRY STANDARD

Technical Specifications are subject to change without notice

Date Created/Updated: 18 July 2012

Scale: 1:20

Cylinder 4 stage front end with plain eye

CS150E46006B19A01C

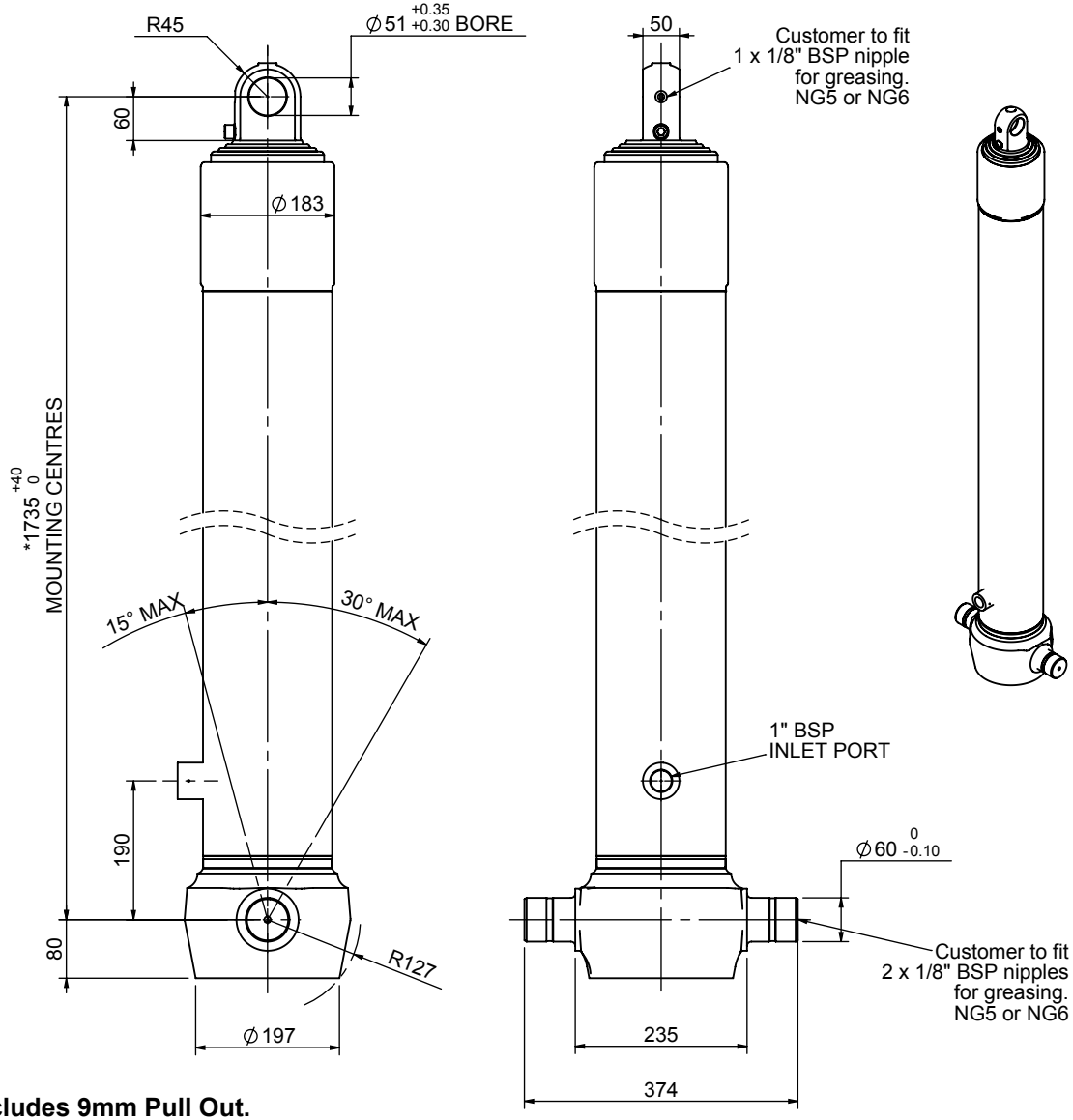

***Includes 9mm Pull Out.**
All Stages Chrome Plated

SPECIFICATION		TIPPING CAPACITY : 24-32 TONNES***		
Stage	Diameter	Length	Stroke	Swept Volume
-	-	-	-	-
-	-	-	-	-
0	177	1725	-	-
1	155	1690	1477	28
2	136	1690	1497	22
3	117	1690	1512	16
4	98	1690	1517	11
		Total (+5/-10)	6003	77
Final stroke reduced by	0	Priming Volume		20
Cylinder Mass (Kg)	190	Total Volume (Litres)		97
Maximum Pressure (Bar)	190	Max. first stage thrust		225 KN

***TIPPING CAPACITY AT WORKING PRESSURE

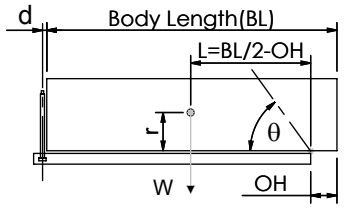

BODY LENGTH (BL)						OH
7500		8000		8500		
26	49°	25	46°	24	43°	150
28	52°	27	48°	25	45°	450
32	54°	29	50°	27	46°	750

Tipping angle (θ)

Body + payload mass,W (tonne)

d = 0; r = 750; Working Pressure 120 bar

For guidance only;
Higher working pressures and tipping capacities may be possible.
To check your application email - applications@edbro.co.uk

NOTES

1. This cylinder is for lifting purposes only and side load conditions should be avoided
2. Cylinder is painted in primer paint to RAL5013
3. Refer to www.edbro.com for;-
   - Bracket details
   - Installation instructions that must be observed
   - Correct oil selection
   - An explanation of tipping capacity

Edbro
SETTING THE INDUSTRY STANDARD

Edbro plc
Nelson Street, Bolton, England, BL3 2JJ
Tel +44 (0) 1204 528888 Fax +44 (0) 1204 531957
Email: postmaster@edbro.com Web: www.edbro.com

Technical Specifications are subject to change without notice
Date Created/Updated: 18 July 2012
Refer www.edbro.com to confirm latest specification
All dimensions are in 'mm', unless otherwise stated

Cylinder Outline Drawing

CS150E46006B19A01C

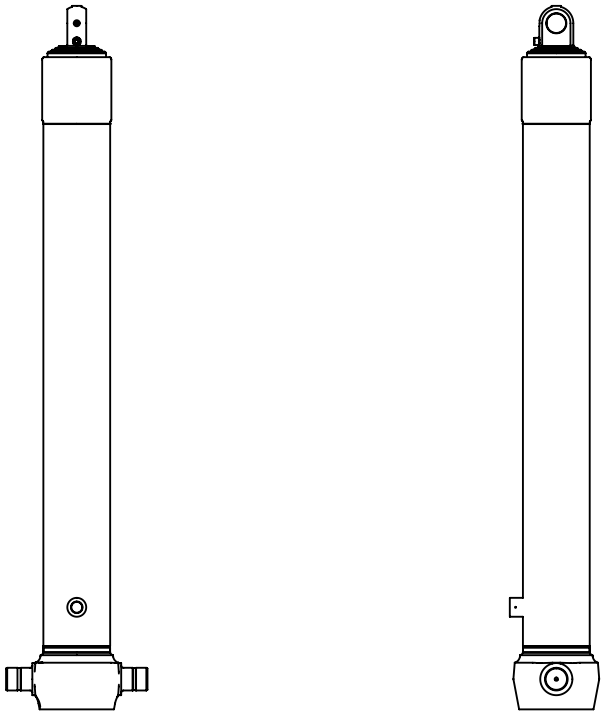

CS150E46006B19A01C

Edbro plc
Nelson Street, Bolton, Lancashire BL3 2JJ UK
Tel +44 (0) 1204 528888 Fax +44 (0) 1204 531957
Email: postmaster@edbro.com Web: www.edbro.com

SETTING THE INDUSTRY STANDARD

Technical Specifications are subject to change without notice

Date Created/Updated: 18 July 2012

Scale: 1:20

Cylinder 5 stage front end with plain eye

CS150E56028B19A01C

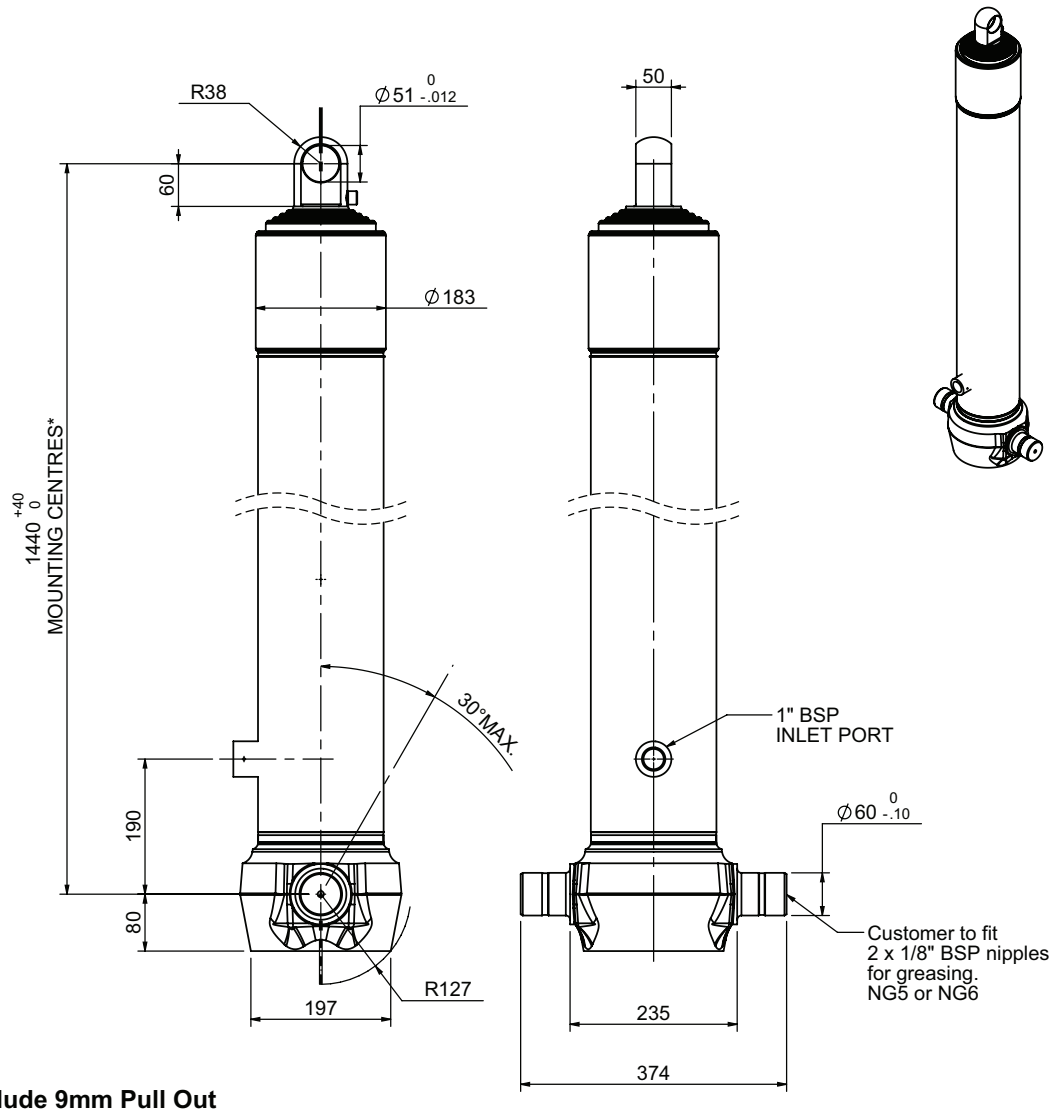

***Include 9mm Pull Out**
All Stages Chrome Plated

SPECIFICATION			RATED CAPACITY : 17-22 TONNES***	
Stage	Diameter	Length	Stroke	Swept Volume
-	-	-	-	-
0	177	-	-	-
1	155	1425	1177	-
2	136	1390	1197	17
3	117	1390	1212	13
4	102	1390	1217	10
5	79.74	1390	1222	6
Final stroke reduced by	0	Total (+5/-10)	6025	46
Cylinder Mass (Kg)	167.16	Priming Volume		14.5
Rated Pressure (Bar)	120	Total Volume (Litres)		60.5
Maximum Pressure (Bar)	175	Max. first stage thrust		230 KN

***TIPPING CAPACITY AT RATED PRESSURE

d = 0 ; r = 750

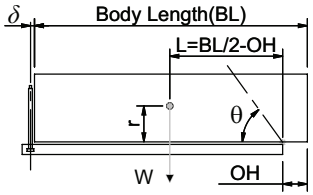

BODY LENGTH (BL)						OH
7500		7750		8000		
18	49°	17	48°	17	46°	150
20	52°	19	50°	18	48°	450
22	54°	21	52°	20	50°	750

Tipping angle (θ)
Body + payload mass,W (tonne)

For guidance only;
Higher Rated Pressures may be possible. To check your application, email Edbro plc at <applications@edbro.co.uk>

NOTES

- If hydraulic pressure is used to limit overloading, the system relief valve must be set to the Rated Pressure unless agreed otherwise by Edbro
- The system relief valve can be set to Maximum Pressure if the load is limited by other means.See RATINGS page for advice
- This cylinder is for lifting purposes only and sideload conditions must be avoided
- Cylinder is painted in primer paint to RAL5013
- See bracket options page BRKT01, BRKT02
- See installation instructions INSTALL01
- Use oil according to specification OIL01

Edbro
SETTING THE INDUSTRY STANDARD

Edbro plc
Nelson Street, Bolton, Lancashire BL3 2JJ UK
Tel +44 (0) 1204 528888 Fax +44 (0) 1204 531957
Email: postmaster@edbro.com Web: www.edbro.com

Technical Specifications are subject to change without notice
Date Created/Updated: 06 April 2011 09:54:49
Refer www.edbro.com to confirm latest specification
All dimensions are in 'mm', unless otherwise stated

Cylinder 5 stage front end with outer cover

CS150054778B19A31C

****ALLOW 50mm TO REMOVE CAP FOR SERVICING**

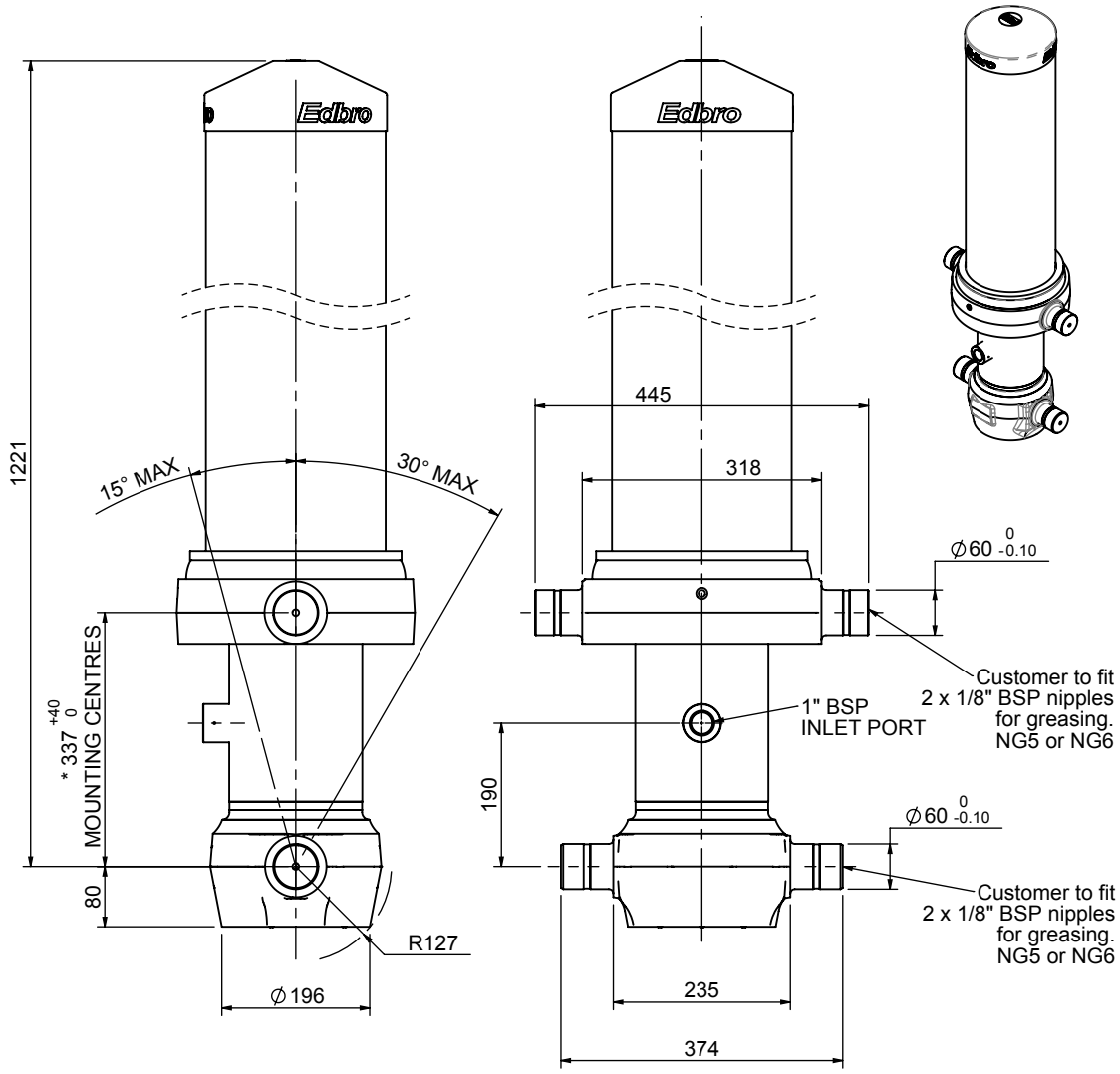

***Includes 7mm Pull Out. All Stages Chrome Plated**

SPECIFICATION		TIPPING CAPACITY : 28-43 TONNES***		
Stage	Diameter	Length	Stroke	Swept Volume
OUTER COVER	239	845	-	-
0	177	1175	-	-
1	155	1140	930	18
2	136	1140	947	14
3	117	1140	962	10
4	98	1140	967	7
5	79	1140	972	5
		Total (+5/-10)	4778	54
Final stroke reduced by	0	Priming Volume		12
Cylinder Mass (Kg)	200	Total Volume (Litres)		66
Maximum Pressure (Bar)	190	Max. first stage thrust		225 KN

***TIPPING CAPACITY AT WORKING PRESSURE

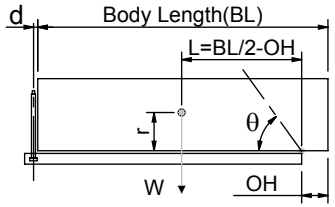

BODY LENGTH (BL)						OH
5970		6269		6567		
31	47°	30	44°	28	42°	150
36	49°	33	47°	31	44°	450
43	52°	39	49°	36	47°	750

Tipping angle (θ)

Body + payload mass,W (tonne)

d = 229; r = 750; Working Pressure 190 bar

For guidance only;
Higher working pressures and tipping capacities may be possible.
To check your application email - applications@edbro.co.uk

NOTES

1. This cylinder is for lifting purposes only and side load conditions should be avoided
2. Cylinder is painted in primer paint to RAL5013
3. Refer to www.edbro.com for;-
   - Bracket details
   - Installation instructions that must be observed
   - Correct oil selection
   - An explanation of tipping capacity

JOST UK Ltd
Edbro House, Nelson Street, Bolton, England, BL3 2JJ
Tel +44 (0) 1204 528888 Fax +44 (0) 1204 531957
Email: sales@jost-world.com Web: www.edbro.com

Technical Specifications are subject to change without notice
Date Created/Updated: 08 October 2020
Refer www.edbro.com to confirm latest specification
All dimensions are in 'mm', unless otherwise stated

Cylinder 4 stage front end with Outer Cover

CS150045406B19A11C

****ALLOW 50mm TO REMOVE CAP FOR SERVICING**

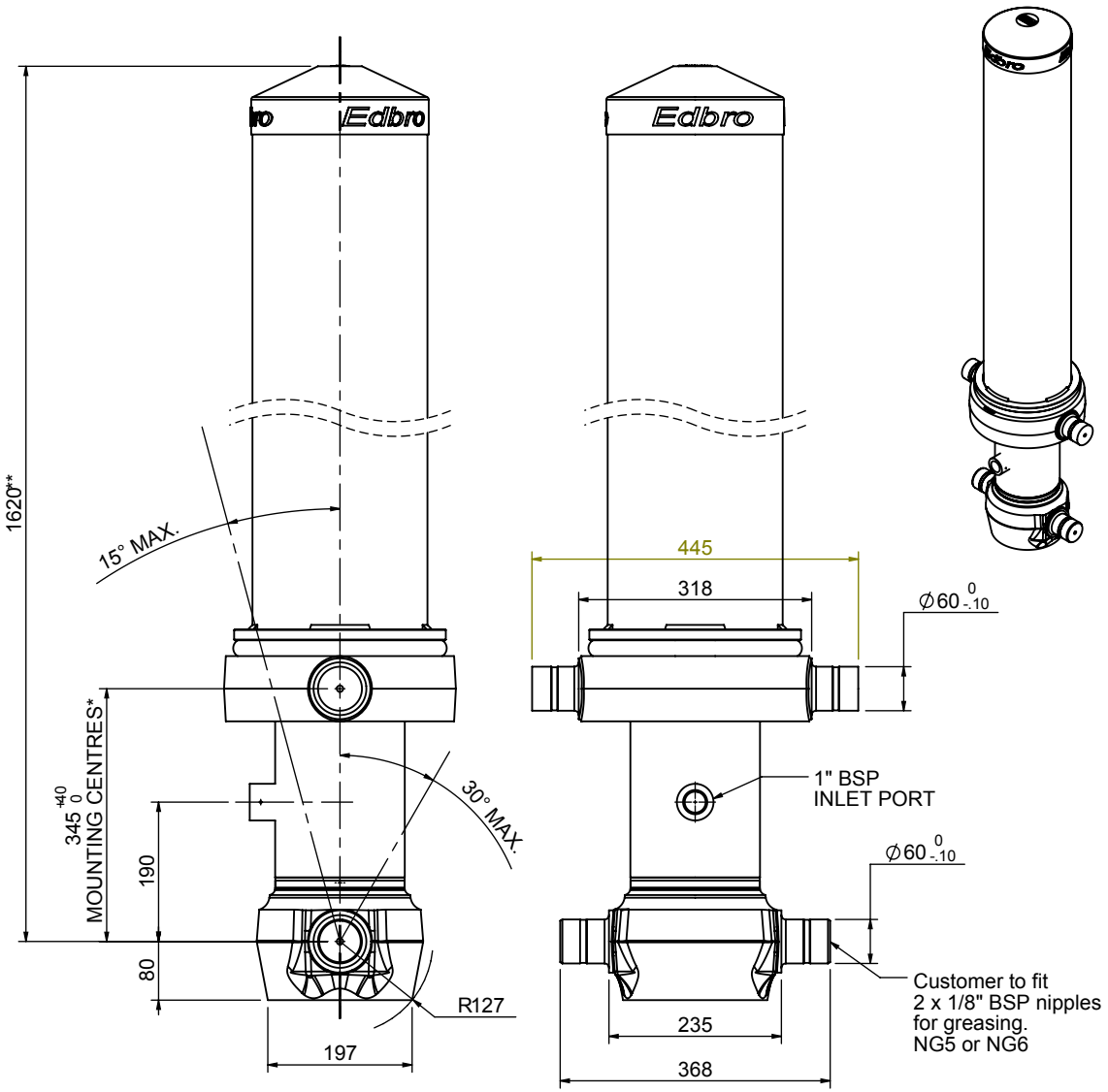

***Include 11mm Pull Out**
All Stages Chrome Plated

SPECIFICATION — RATED CAPACITY : 37-54 TONNES***

Stage	Diameter	Length	Stroke	Swept Volume
-	-	-	-	-
OUTER COVER	239	1240	-	-
0	177	1575	-	-
1	155	1540	1325	25
2	136	1540	1347	20
3	117	1540	1362	15
4	98	1540	1367	10
Final stroke reduced by	0	Total (+5/-10)	5401	70
Cylinder Mass (Kg)	243.08	Priming Volume		17.6
Rated Pressure (Bar)	175	Total Volume (Litres)		87.6
Maximum Pressure (Bar)	175	Max. first stage thrust		230 KN

***TIPPING CAPACITY AT RATED PRESSURE

d = 229 ; r = 750

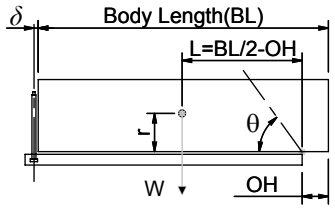

BODY LENGTH (BL)						OH
6500		7000		7500		
41	49°	39	45°	37	42°	150
47	51°	43	47°	40	44°	450
54	54°	48	50°	44	46°	750

Tipping angle (θ)
Body + payload mass,W (tonne)

For guidance only;
Higher Rated Pressures may be possible. To check your application, email Edbro plc at <applications@edbro.co.uk>

NOTES

- If hydraulic pressure is used to limit overloading, the system relief valve must be set to the Rated Pressure unless agreed otherwise by Edbro
- The system relief valve can be set to Maximum Pressure if the load is limited by other means.See RATINGS page for advice
- This cylinder is for lifting purposes only and sideload conditions must be avoided
- Cylinder is painted in primer paint to RAL5013
- See bracket options page BRKT01, BRKT02
- See installation instructions INSTALL01
- Use oil according to specification OIL01

Edbro
SETTING THE INDUSTRY STANDARD

Edbro plc
Nelson Street, Bolton, Lancashire BL3 2JJ UK
Tel +44 (0) 1204 528888 Fax +44 (0) 1204 531957
Email: postmaster@edbro.com Web: www.edbro.com

Technical Specifications are subject to change without notice

Date Created/Updated: 19 November 2009 13:41:08

Refer www.edbro.com to confirm latest specification
All dimensions are in 'mm', unless otherwise stated

Cylinder 5 stage front end with outer cover

CS150056028B19A11

****ALLOW 50mm TO REMOVE CAP FOR SERVICING**

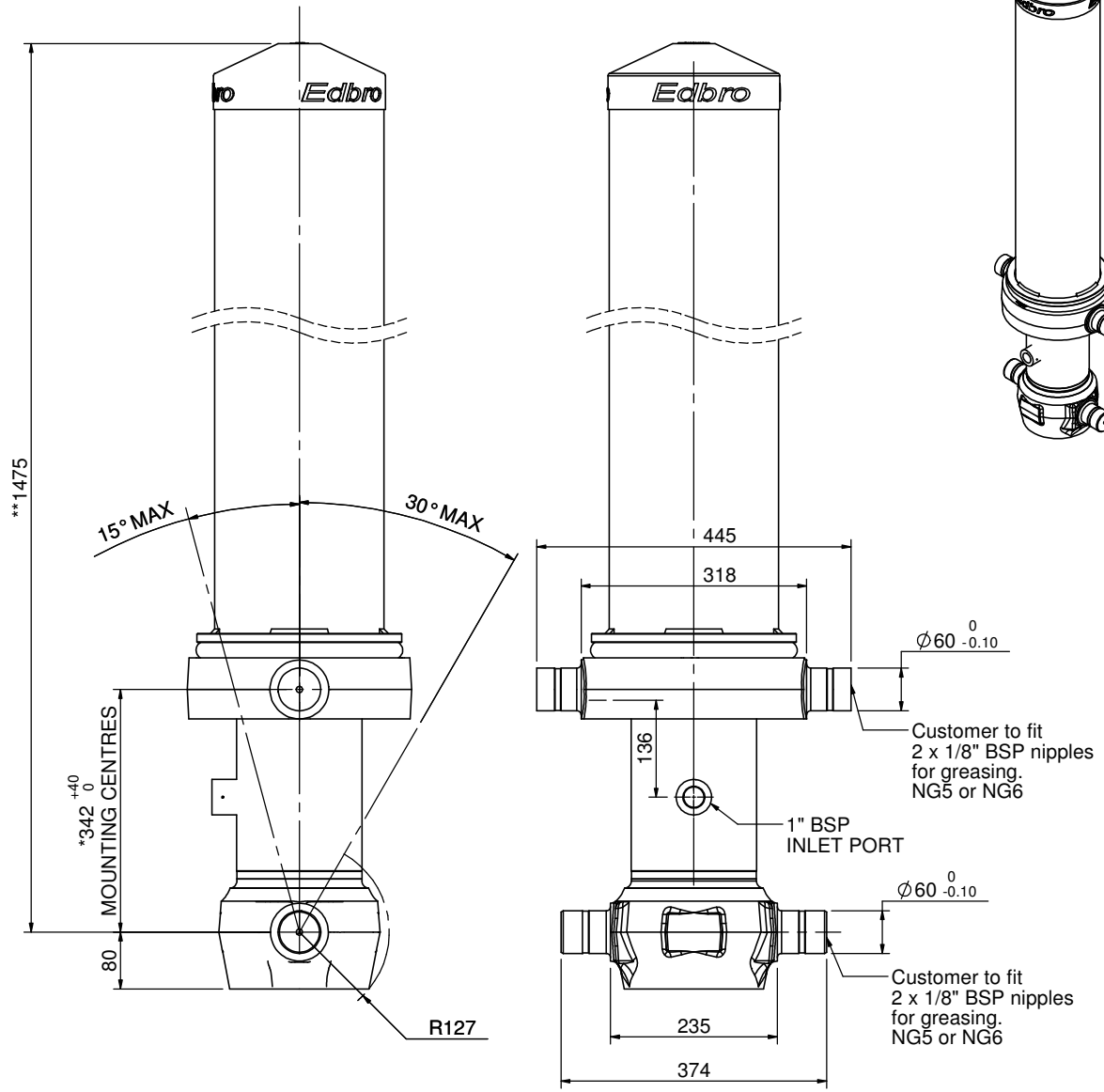

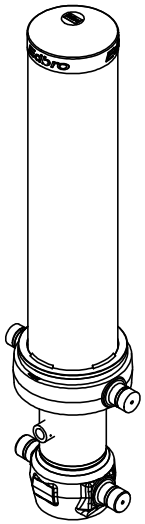

***Includes 11mm Pull Out.None**

SPECIFICATION — TIPPING CAPACITY : 24-35 TONNES***

Stage	Diameter	Length	Stroke	Swept Volume
OUTER COVER	239	1095	-	-
0	177	1425	-	-
1	155	1390	1175	22
2	136	1390	1197	17
3	117	1390	1212	13
4	98	1390	1217	9
5	79	1390	1222	6
		Total (+5/-10)	6023	67
Final stroke reduced by	0	Priming Volume		15
Cylinder Mass (Kg)	231	Total Volume (Litres)		82
Maximum Pressure (Bar)	190	Max. first stage thrust		230 KN

***TIPPING CAPACITY AT WORKING PRESSURE

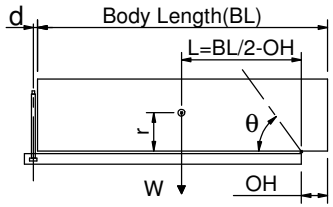

BODY LENGTH (BL)						OH
7250		7750		8250		
27	49°	26	45°	24	43°	150
30	51°	28	47°	26	44°	450
35	54°	31	50°	29	46°	750

Tipping angle (θ)

Body + payload mass,W (tonne)

d = 229; r = 750; Working Pressure 175 bar

For guidance only;
Higher working pressures and tipping capacities may be possible.
To check your application email - applications@edbro.co.uk

NOTES

1. This cylinder is for lifting purposes only and side load conditions should be avoided
2. Cylinder is painted in primer paint to RAL5013
3. Refer to www.edbro.com for;-
   - Bracket details
   - Installation instructions that must be observed
   - Correct oil selection
   - An explanation of tipping capacity

Edbro
SETTING THE INDUSTRY STANDARD

Edbro plc
Nelson Street, Bolton, England, BL3 2JJ
Tel +44 (0) 1204 528888 Fax +44 (0) 1204 531957
Email: postmaster@edbro.com Web: www.edbro.com

Technical Specifications are subject to change without notice

Date Created/Updated: 09 September 2015

Refer www.edbro.com to confirm latest specification
All dimensions are in 'mm', unless otherwise stated

Cylinder 5 stage front end with outer cover

CS150056527B19F11

****ALLOW 50mm TO REMOVE CAP FOR SERVICING**

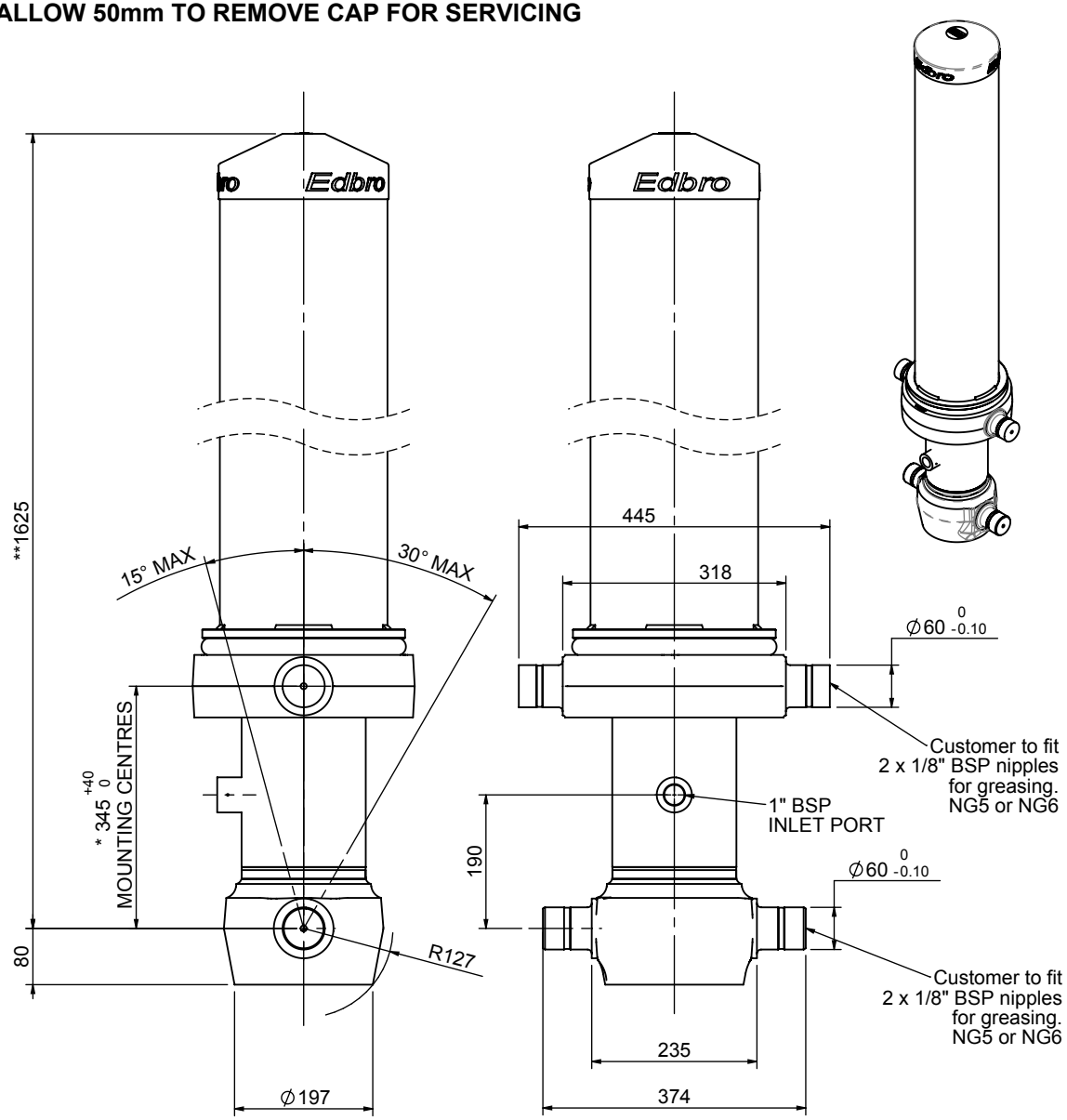

***Includes 11mm Pull Out.**

SPECIFICATION		TIPPING CAPACITY : 26-38 TONNES***		
Stage	Diameter	Length	Stroke	Swept Volume
OUTER COVER	239	1245	-	-
0	177	1575	-	-
1	155	1540	1325	25
2	136	1540	1347	20
3	117	1540	1362	15
4	98	1540	1367	10
5	79	1540	1122	6
		Total (+5/-10)	6523	76
Final stroke reduced by	250	Priming Volume		15
Cylinder Mass (Kg)	252	Total Volume (Litres)		91
Maximum Pressure (Bar)	190	Max. first stage thrust		225 KN

***TIPPING CAPACITY AT WORKING PRESSURE

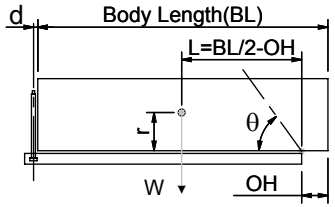

BODY LENGTH (BL)						OH
7500		8000		8500		
29	51°	27	48°	26	45°	150
33	54°	30	50°	28	47°	450
38	56°	33	52°	30	49°	750

Tipping angle (θ)

Body + payload mass,W (tonne)

d = 229; r = 750; Working Pressure 175 bar

For guidance only;
Higher working pressures and tipping capacities may be possible.
To check your application email - applications@edbro.co.uk

NOTES

1. This cylinder is for lifting purposes only and side load conditions should be avoided
2. Cylinder is painted in primer paint to RAL5013
3. Refer to www.edbro.com for;-
   - Bracket details
   - Installation instructions that must be observed
   - Correct oil selection
   - An explanation of tipping capacity

Edbro
SETTING THE INDUSTRY STANDARD

Edbro plc
Nelson Street, Bolton, England, BL3 2JJ
Tel +44 (0) 1204 528888 Fax +44 (0) 1204 531957
Email: postmaster@edbro.com Web: www.edbro.com

Technical Specifications are subject to change without notice
Date Created/Updated: 31 August 2012
Refer www.edbro.com to confirm latest specification
All dimensions are in 'mm', unless otherwise stated

Cylinder Outline Drawing

CS150056527B19F11

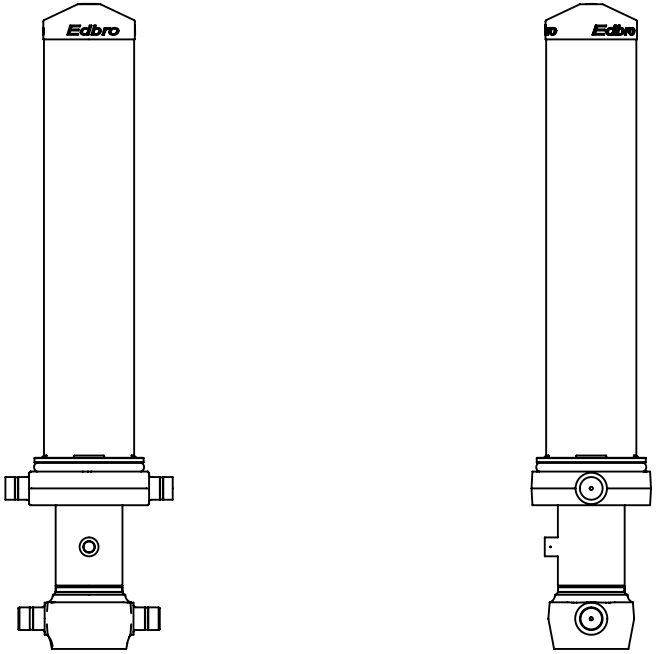

CS150056527B19F11

Edbro plc
Nelson Street, Bolton, Lancashire BL3 2JJ UK
Tel +44 (0) 1204 528888 Fax +44 (0) 1204 531957
Email: postmaster@edbro.com Web: www.edbro.com

SETTING THE INDUSTRY STANDARD

Technical Specifications are subject to change without notice

Date Created/Updated: 31 August 2012

Scale: 1:20

Cylinder 5 stage front end with plain eye

CS170E54733B19A01C

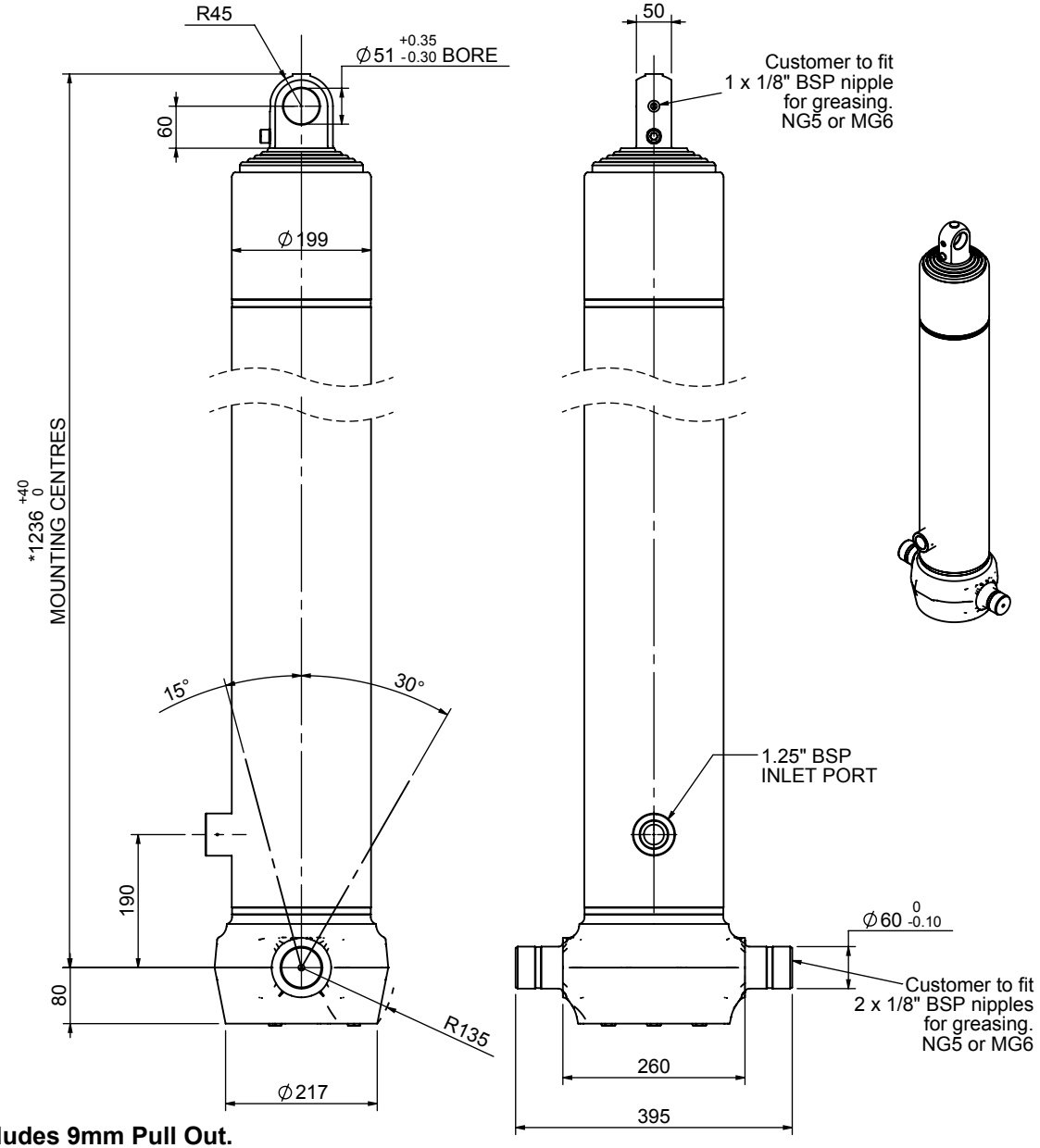

***Includes 9mm Pull Out.**
All Stages Chrome Plated

SPECIFICATION — TIPPING CAPACITY : 33-47 TONNES***

Stage	Diameter	Length	Stroke	Swept Volume
-	-	-	-	-
0	199	1175	-	-
1	176	1140	917	22
2	155	1140	937	18
3	136	1140	947	14
4	117	1140	962	10
5	98	1140	967	7
		Total (+5/-10)	4730	71
Final stroke reduced by	0	Priming Volume		18
Cylinder Mass (Kg)	180	Total Volume (Litres)		89
Maximum Pressure (Bar)	190	Max. first stage thrust		265 KN

***TIPPING CAPACITY AT WORKING PRESSURE

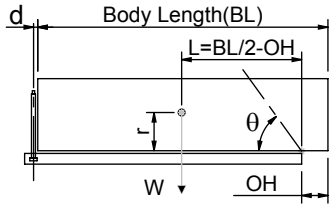

BODY LENGTH (BL)						OH
6750		7250		7750		
37	43°	35	39°	33	37°	150
41	45°	38	41°	36	38°	450
47	47°	42	43°	39	40°	750

Tipping angle (θ)

Body + payload mass,W (tonne)

d = 0; r = 900; Working Pressure 165 bar

For guidance only;
Higher working pressures and tipping capacities may be possible.
To check your application email - applications@edbro.co.uk

NOTES

1. This cylinder is for lifting purposes only and side load conditions should be avoided
2. Cylinder is painted in primer paint to RAL5013
3. Refer to www.edbro.com for;-
   - Bracket details
   - Installation instructions that must be observed
   - Correct oil selection
   - An explanation of tipping capacity

Edbro
Member of JOST-World

JOST UK Ltd
Edbro House, Nelson Street, Bolton, England, BL3 2JJ
Tel +44 (0) 1204 528888 Fax +44 (0) 1204 531957
Email: sales@jost-world.com Web: www.edbro.com

Technical Specifications are subject to change without notice
Date Created/Updated: 24 January 2017
Refer www.edbro.com to confirm latest specification
All dimensions are in 'mm', unless otherwise stated

Cylinder 5 stage front end with plain eye

CS170E55233B70A01

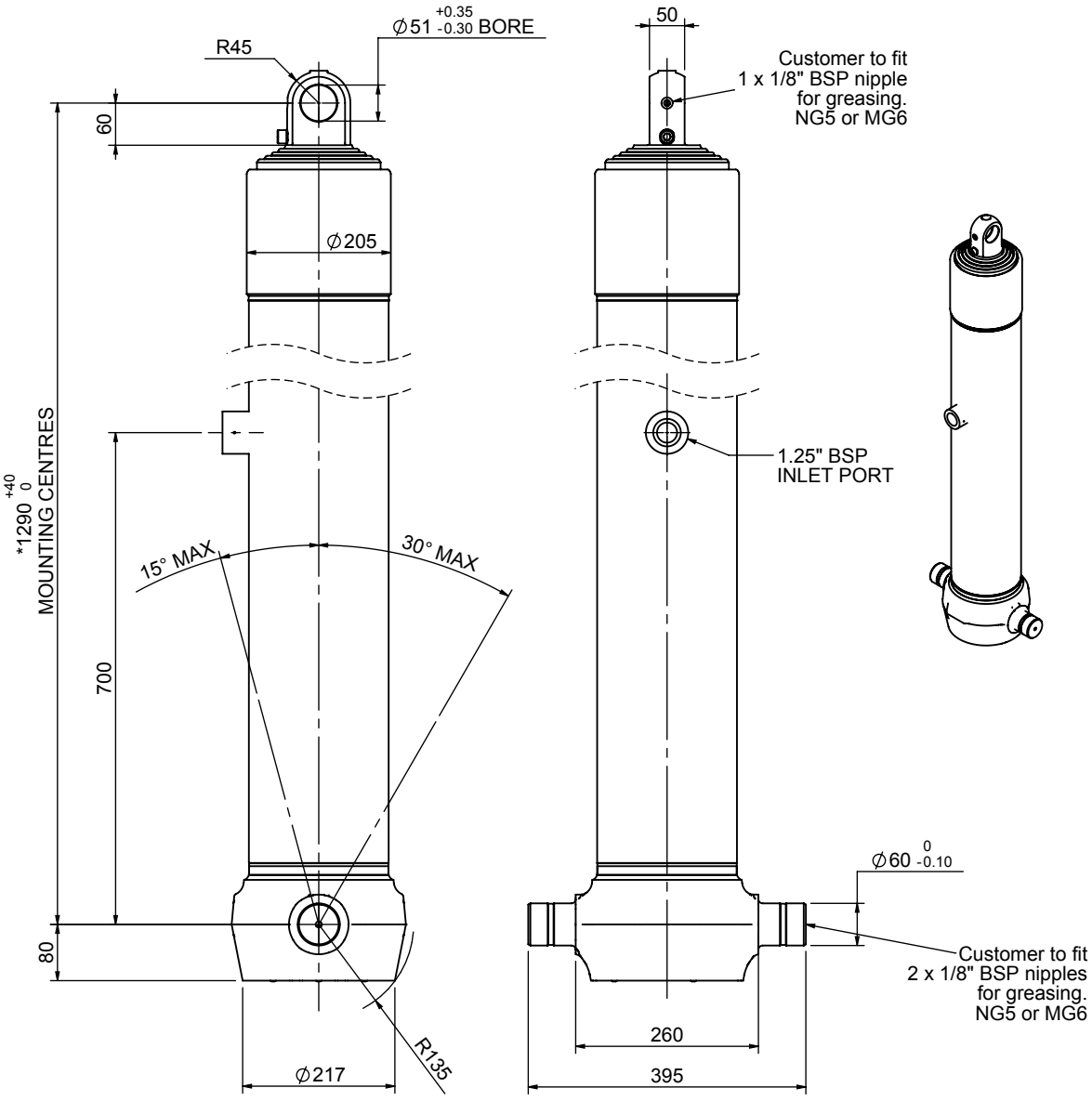

***Includes 9mm Pull Out.**
Last Stage Chrome Plated

SPECIFICATION — TIPPING CAPACITY : 37-56 TONNES***

Stage	Diameter	Length	Stroke	Swept Volume
-	-	-	-	-
0	199	1275	-	-
1	176	1240	1017	25
2	155	1240	1037	20
3	136	1240	1047	15
4	117	1240	1062	11
5	98	1240	1067	8
		Total (+5/-10)	5230	79
Final stroke reduced by	0	Priming Volume		16
Cylinder Mass (Kg)	195	Total Volume (Litres)		95
Maximum Pressure (Bar)	190	Max. first stage thrust		265 KN

***TIPPING CAPACITY AT WORKING PRESSURE

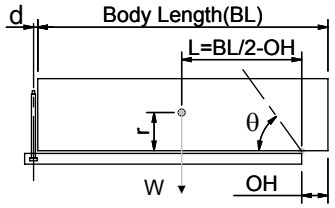

BODY LENGTH (BL)						OH
6750		7250		7750		
42	48°	39	44°	37	41°	150
47	50°	43	46°	40	43°	450
56	53°	49	48°	44	45°	750

Tipping angle (θ)
Body + payload mass,W (tonne)

d = 0; r = 900; Working Pressure 175 bar

For guidance only;
Higher working pressures and tipping capacities may be possible.
To check your application email - applications@edbro.co.uk

NOTES

1. This cylinder is for lifting purposes only and side load conditions should be avoided
2. Cylinder is painted in primer paint to RAL5013
3. Refer to www.edbro.com for;-
   - Bracket details
   - Installation instructions that must be observed
   - Correct oil selection
   - An explanation of tipping capacity

Edbro
SETTING THE INDUSTRY STANDARD

Edbro plc
Nelson Street, Bolton, England, BL3 2JJ
Tel +44 (0) 1204 528888 Fax +44 (0) 1204 531957
Email: postmaster@edbro.com Web: www.edbro.com

Technical Specifications are subject to change without notice

Date Created/Updated: 14 August 2012

Refer www.edbro.com to confirm latest specification
All dimensions are in 'mm', unless otherwise stated

Cylinder Outline Drawing

CS170E55233B70A01

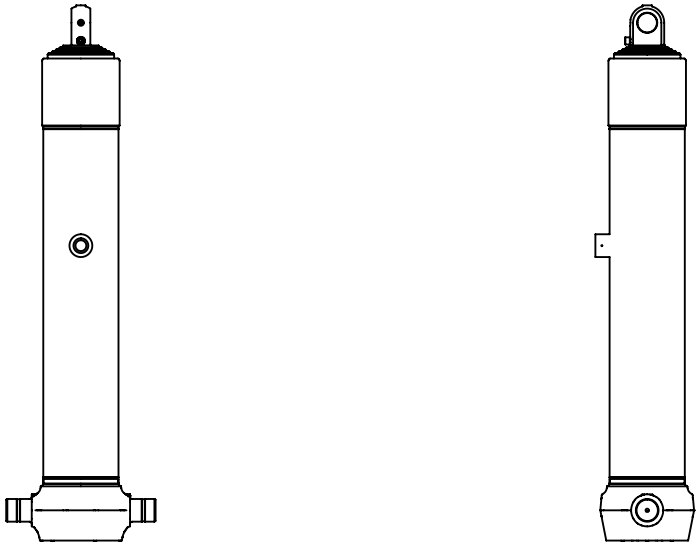

CS170E55233B70A01

Edbro plc
Nelson Street, Bolton, Lancashire BL3 2JJ UK
Tel +44 (0) 1204 528888 Fax +44 (0) 1204 531957
Email: postmaster@edbro.com Web: www.edbro.com

SETTING THE INDUSTRY STANDARD

Technical Specifications are subject to change without notice

Date Created/Updated: 14 August 2012

Scale: 1:20

Cylinder 5 stage front end with plain eye

CS170E55733B19A01C

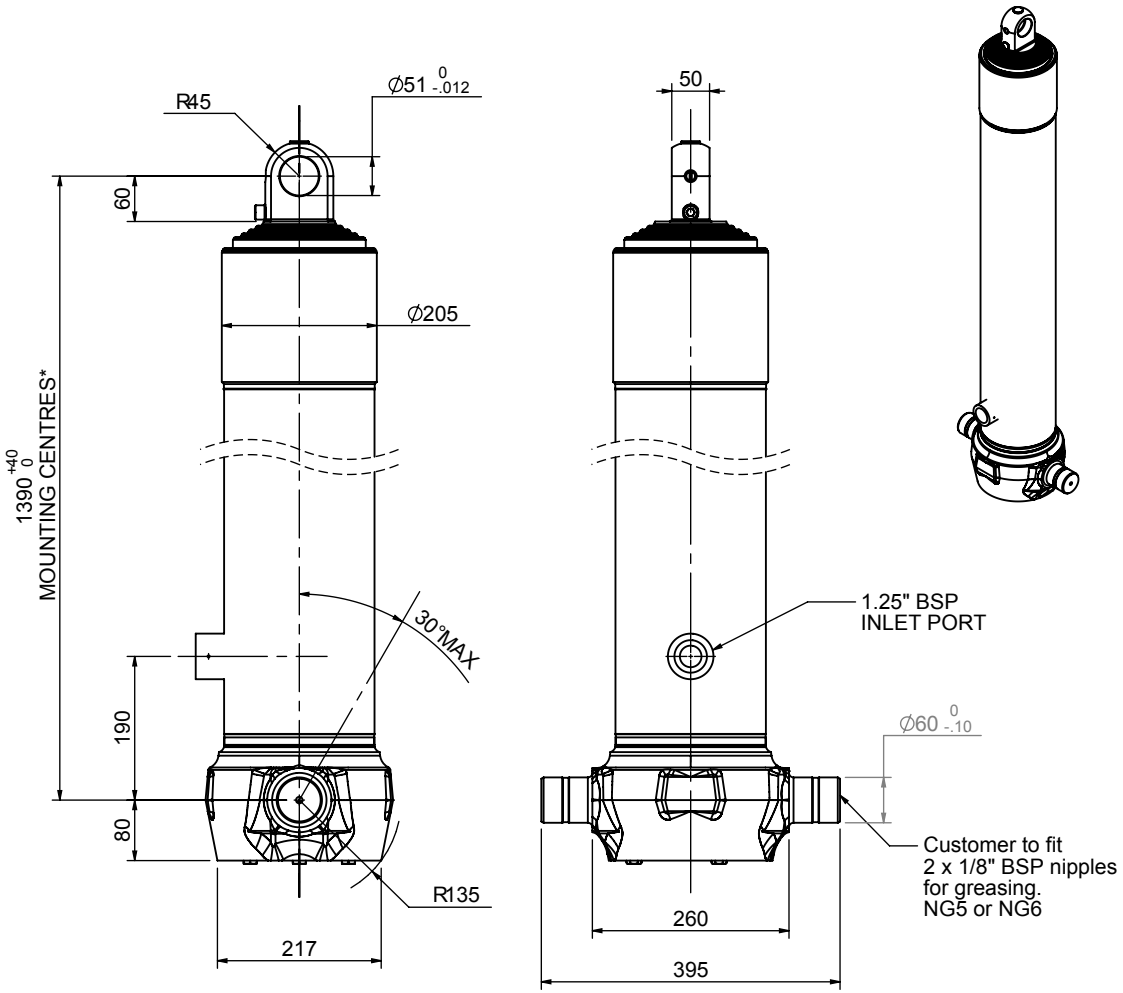

***Includes 9mm Pull Out**
All Stages Chrome Plated

SPECIFICATION			RATED CAPACITY : 31-46 TONNES***	
Stage	Diameter	Length	Stroke	Swept Volume
-	-	-	-	-
0	199	1375	-	-
1	176	1340	1117	27
2	155	1340	1137	21
3	136	1340	1147	17
4	117	1340	1162	12
5	98	1340	1167	9
Final stroke reduced by	0	Total (+5/-10)	5730	86
Cylinder Mass (Kg)	209.58	Priming Volume		18
Rated Pressure (Bar)	150	Total Volume (Litres)		104
Maximum Pressure (Bar)	175	Max. first stage thrust		260 KN

***TIPPING CAPACITY AT RATED PRESSURE

d = 0 ; r = 900

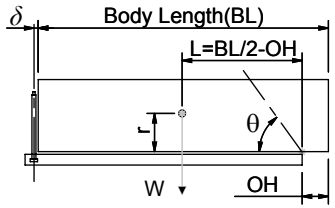

BODY LENGTH (BL)						OH
7250		7750		8250		
35	49°	33	45°	31	42°	150
40	51°	36	47°	34	44°	450
46	54°	40	49°	37	46°	750

Tipping angle (θ)
Body + payload mass,W (tonne)

For guidance only;
Higher Rated Pressures may be possible. To check your application, email Edbro plc at <applications@edbro.co.uk>

NOTES

- If hydraulic pressure is used to limit overloading, the system relief valve must be set to the Rated Pressure unless agreed otherwise by Edbro
- The system relief valve can be set to Maximum Pressure if the load is limited by other means.See RATINGS page for advice
- This cylinder is for lifting purposes only and sideload conditions must be avoided
- Cylinder is painted in primer paint to RAL5013
- See bracket options page BRKT01, BRKT02
- See installation instructions INSTALL01
- Use oil according to specification OIL01

Edbro
SETTING THE INDUSTRY STANDARD

Edbro plc
Nelson Street, Bolton, Lancashire BL3 2JJ UK
Tel +44 (0) 1204 528888 Fax +44 (0) 1204 531957
Email: postmaster@edbro.com Web: www.edbro.com

Technical Specifications are subject to change without notice

Date Created/Updated: 26 August 2009 07:37:08

Refer www.edbro.com to confirm latest specification
All dimensions are in 'mm', unless otherwise stated

Cylinder 6 stage front end with plain eye

CS170E65755B19M01C

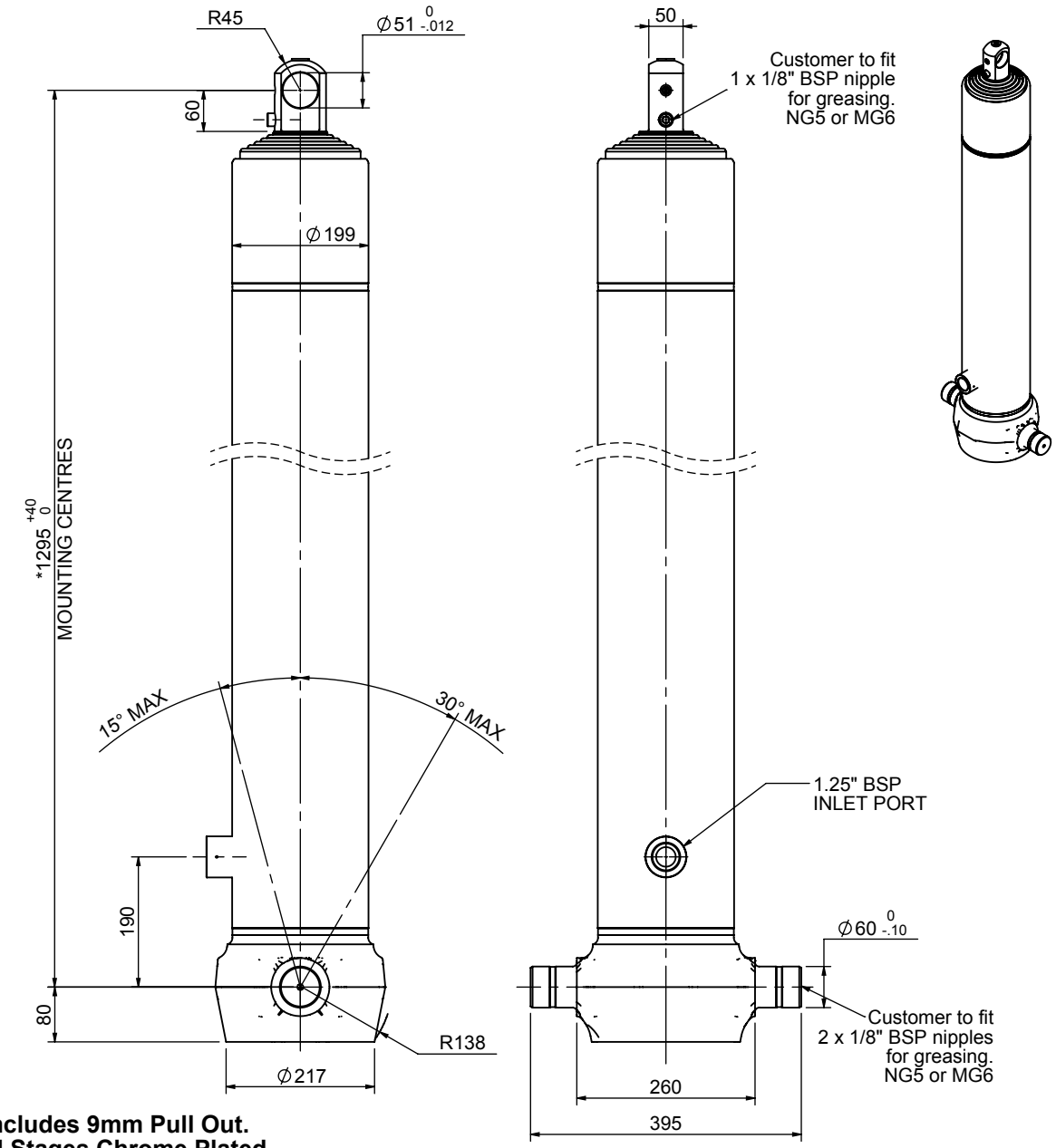

***Includes 9mm Pull Out.**
All Stages Chrome Plated

SPECIFICATION		TIPPING CAPACITY : 25-44 TONNES***		
Stage	Diameter	Length	Stroke	Swept Volume
0	199	1275	-	-
1	176	1240	1020	25
2	155	1240	1037	19
3	136	1240	1047	15
4	117	1240	1062	11
5	98	1240	1067	8
6	79	1240	522	3
		Total (+5/-10)	5755	81
Final stroke reduced by	550	Priming Volume		15
Cylinder Mass (Kg)	200	Total Volume (Litres)		96
Maximum Pressure (Bar)	190	Max. first stage thrust		265 KN

***TIPPING CAPACITY AT WORKING PRESSURE

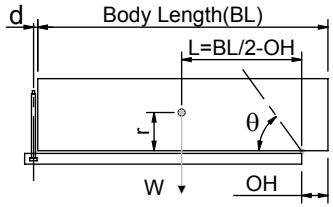

BODY LENGTH (BL)						OH
7100		7600		8100		
30	50°	27	46°	25	43°	150
36	52°	31	48°	28	45°	450
44	55°	36	50°	31	47°	750

Tipping angle (θ)

Body + payload mass,W (tonne)

d = 0; r = 900; Working Pressure 165 bar

For guidance only;
Higher working pressures and tipping capacities may be possible.
To check your application email - applications@edbro.co.uk

NOTES

1. This cylinder is for lifting purposes only and side load conditions should be avoided
2. Cylinder is painted in primer paint to RAL5013
3. Refer to www.edbro.com for;-
   - Bracket details
   - Installation instructions that must be observed
   - Correct oil selection
   - An explanation of tipping capacity

JOST UK LTD
Edbro House,Nelson Street, Bolton, England, BL3 2JJ
Tel +44 (0) 1204 528888 Fax +44 (0) 1204 531957
Email: sales@jost-world.com Web: www.edbro.com

Technical Specifications are subject to change without notice
Date Created/Updated: 21 February 2018
Refer www.edbro.com to confirm latest specification
All dimensions are in 'mm', unless otherwise stated

Cylinder 5 stage front end with plain eye

CS170E56233B19A01C

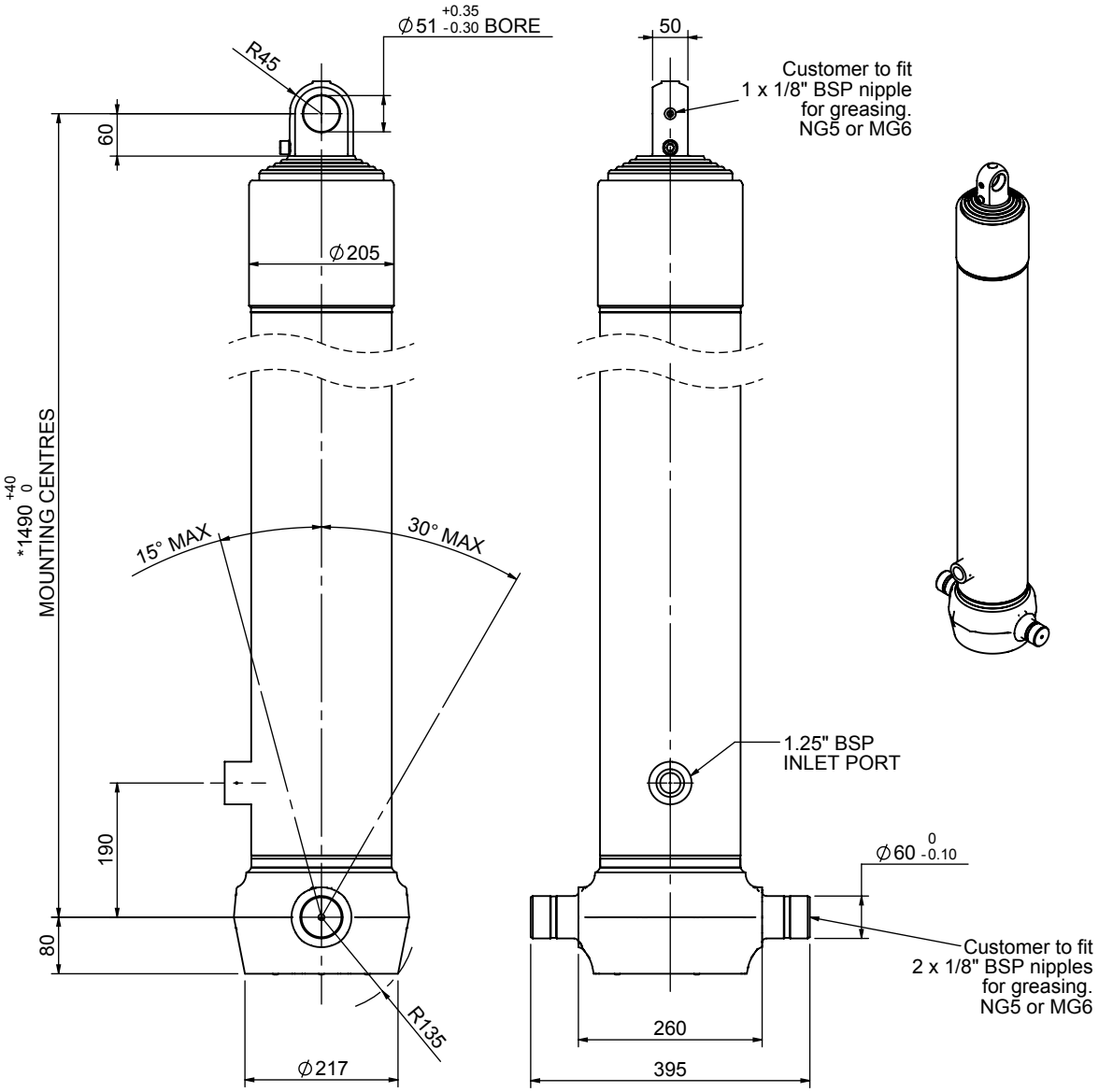

***Includes 9mm Pull Out.**
All Stages Chrome Plated

SPECIFICATION — TIPPING CAPACITY : 28-40 TONNES***

Stage	Diameter	Length	Stroke	Swept Volume
-	-	-	-	-
0	199	1475	-	-
1	176	1440	1217	30
2	155	1440	1237	23
3	136	1440	1247	18
4	117	1440	1262	14
5	98	1440	1267	10
		Total (+5/-10)	6230	95
Final stroke reduced by	0	Priming Volume		19
Cylinder Mass (Kg)	219	Total Volume (Litres)		114
Maximum Pressure (Bar)	190	Max. first stage thrust		265 KN

***TIPPING CAPACITY AT WORKING PRESSURE

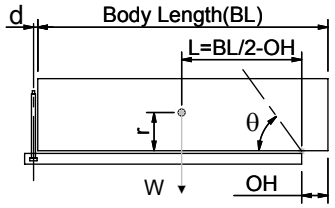

BODY LENGTH (BL)						OH
7750		8250		8750		
32	49°	30	46°	28	43°	150
35	52°	32	48°	30	45°	450
40	54°	36	50°	33	47°	750

Tipping angle (θ)

Body + payload mass,W (tonne)

d = 0; r = 900; Working Pressure 135 bar

For guidance only;
Higher working pressures and tipping capacities may be possible.
To check your application email - applications@edbro.co.uk

NOTES

1. This cylinder is for lifting purposes only and side load conditions should be avoided
2. Cylinder is painted in primer paint to RAL5013
3. Refer to www.edbro.com for;-
   - Bracket details
   - Installation instructions that must be observed
   - Correct oil selection
   - An explanation of tipping capacity

Edbro
SETTING THE INDUSTRY STANDARD

Edbro plc
Nelson Street, Bolton, England, BL3 2JJ
Tel +44 (0) 1204 528888 Fax +44 (0) 1204 531957
Email: postmaster@edbro.com Web: www.edbro.com

Technical Specifications are subject to change without notice

Date Created/Updated: 21 June 2013

Refer www.edbro.com to confirm latest specification
All dimensions are in 'mm', unless otherwise stated

Cylinder Outline Drawing

CS170E56233B19A01C

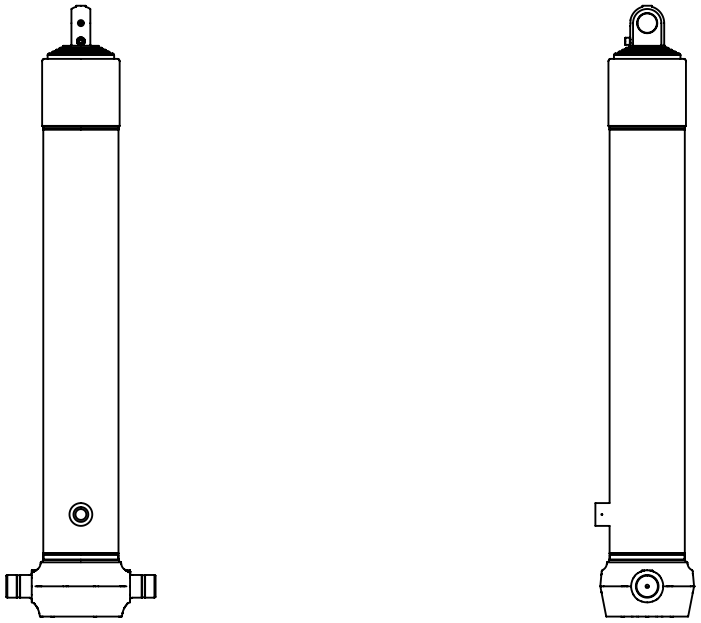

CS170E56233B19A01C

Edbro plc
Nelson Street, Bolton, Lancashire BL3 2JJ UK
Tel +44 (0) 1204 528888 Fax +44 (0) 1204 531957
Email: postmaster@edbro.com Web: www.edbro.com

SETTING THE INDUSTRY STANDARD

Technical Specifications are subject to change without notice

Date Created/Updated: 21 June 2013

Scale: 1:20

Cylinder 5 stage front end with plain eye

CS170E56733B19A01C

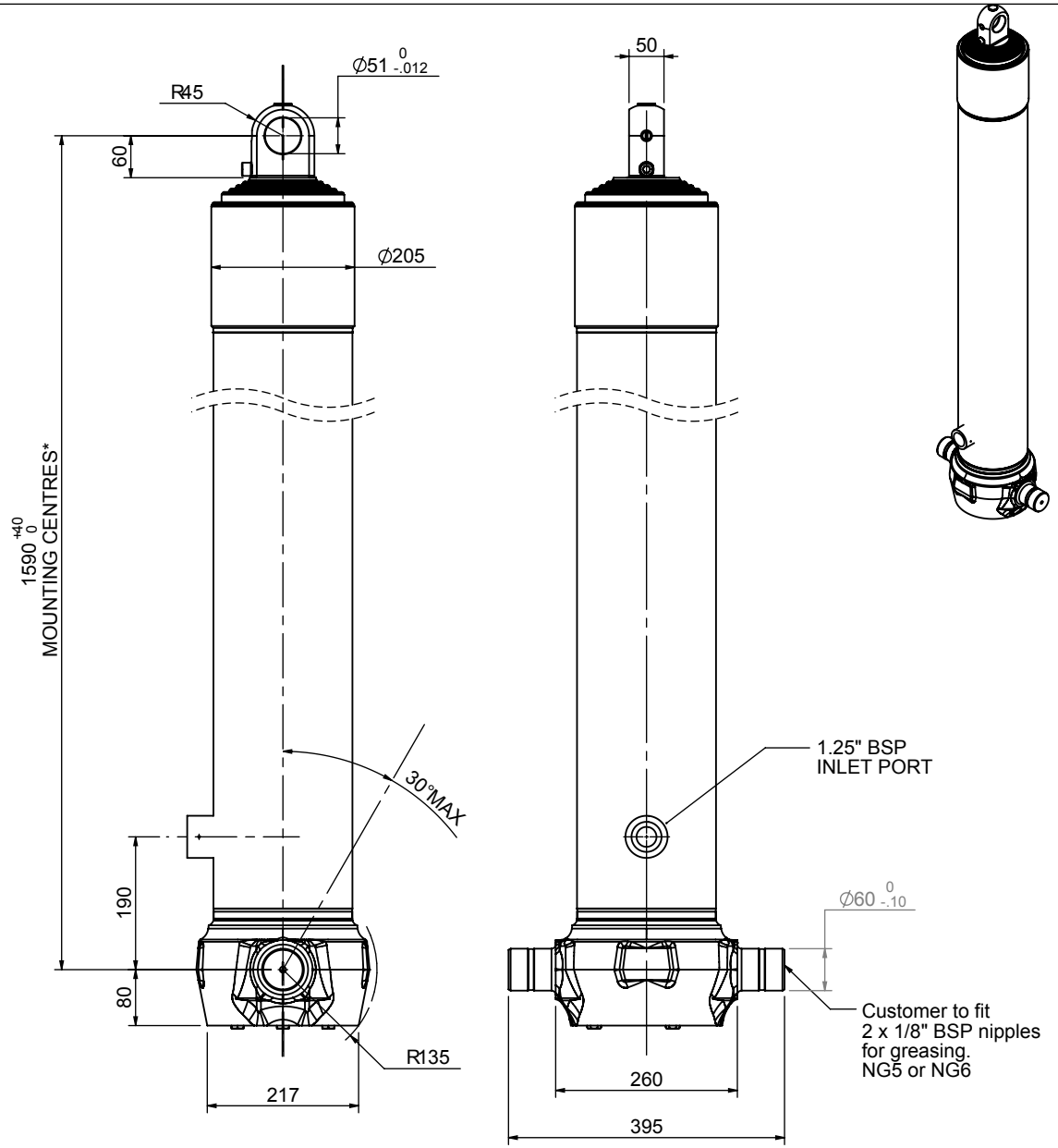

***Includes 9mm Pull Out**
All Stages Chrome Plated

SPECIFICATION — RATED CAPACITY : 31-39 TONNES***

Stage	Diameter	Length	Stroke	Swept Volume
-	-	-	-	-
0	199	1575	-	-
1	176	1540	1317	32
2	155	1540	1337	25
3	136	1540	1347	20
4	117	1540	1362	15
5	98	1540	1367	10
Final stroke reduced by	0	Total (+5/-10)	6730	102
Cylinder Mass (Kg)	234.56	Priming Volume		21
Rated Pressure (Bar)	135	Total Volume (Litres)		123
Maximum Pressure (Bar)	175	Max. first stage thrust		260 KN

***TIPPING CAPACITY AT RATED PRESSURE

d = 0 ; r = 900

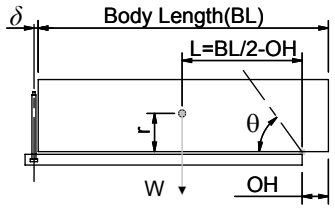

BODY LENGTH (BL)						OH
8500		9000		9500		
31	50°					150
34	52°	32	49°			450
39	55°	35	51°	33	47°	750

Tipping angle (θ)

Body + payload mass,W (tonne)

For guidance only;
Higher Rated Pressures may be possible. To check your application, email Edbro plc at <applications@edbro.co.uk>

NOTES

- If hydraulic pressure is used to limit overloading, the system relief valve must be set to the Rated Pressure unless agreed otherwise by Edbro
- The system relief valve can be set to Maximum Pressure if the load is limited by other means.See RATINGS page for advice
- This cylinder is for lifting purposes only and sideload conditions must be avoided
- Cylinder is painted in primer paint to RAL5013
- See bracket options page BRKT01, BRKT02
- See installation instructions INSTALL01
- Use oil according to specification OIL01

Edbro
SETTING THE INDUSTRY STANDARD

Edbro plc
Nelson Street, Bolton, Lancashire BL3 2JJ UK
Tel +44 (0) 1204 528888 Fax +44 (0) 1204 531957
Email: postmaster@edbro.com Web: www.edbro.com

Technical Specifications are subject to change without notice

Date Created/Updated: 26 August 2009 08:06:58

Refer www.edbro.com to confirm latest specification
All dimensions are in 'mm', unless otherwise stated

Cylinder 5 stage front end with plain eye

CS170E57033B19K02C

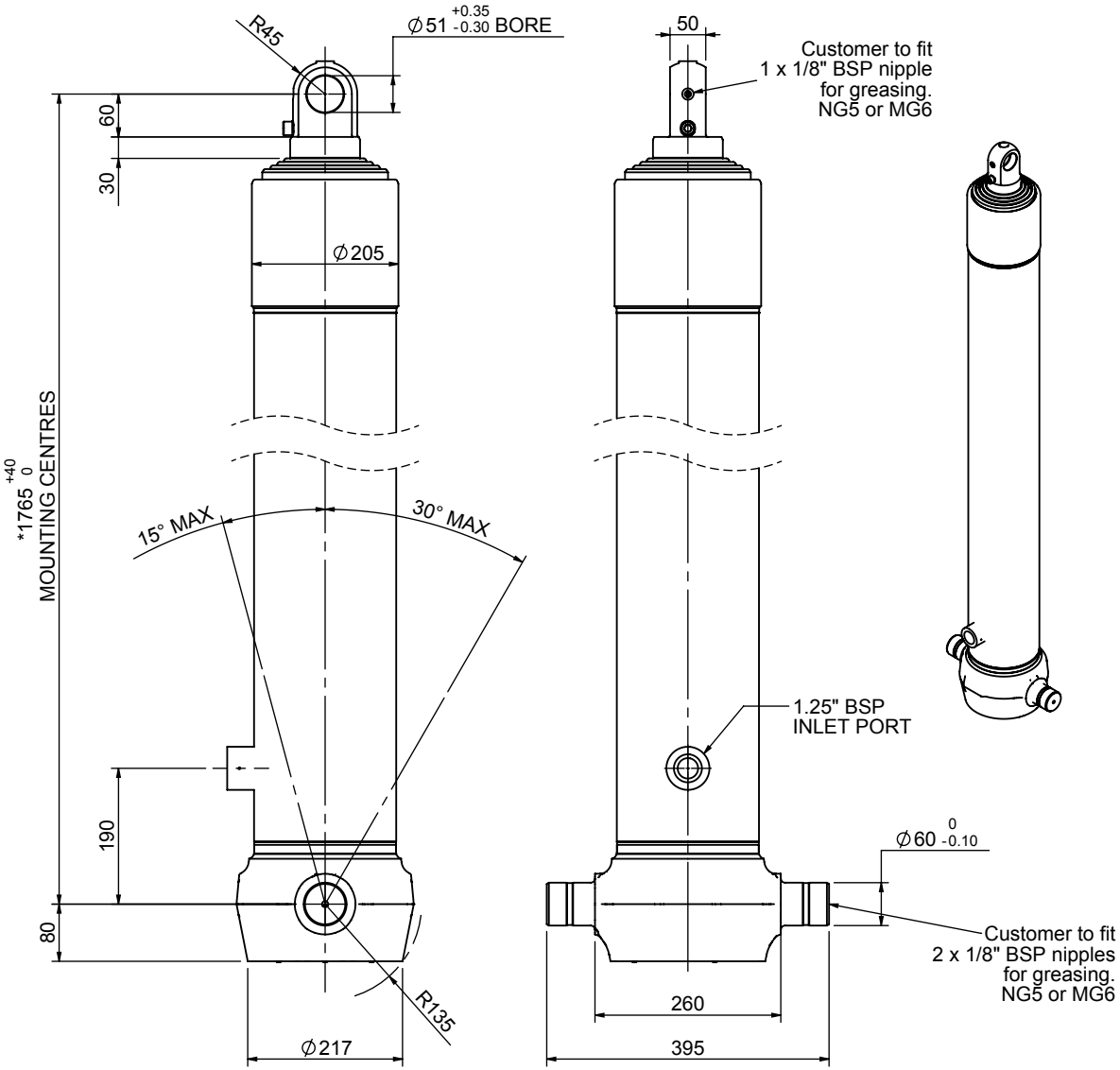

***Includes 9mm Pull Out.**
All Stages Chrome Plated

SPECIFICATION — TIPPING CAPACITY : 27-35 TONNES***

Stage	Diameter	Length	Stroke	Swept Volume
-	-	-	-	-
0	199	1725	-	-
1	176	1690	1467	36
2	155	1690	1487	28
3	136	1690	1497	22
4	117	1690	1512	16
5	98	1715	1067	8
		Total (+5/-10)	7030	110
Final stroke reduced by	450	Priming Volume		23
Cylinder Mass (Kg)	251	Total Volume (Litres)		133
Maximum Pressure (Bar)	190	Max. first stage thrust		265 KN

***TIPPING CAPACITY AT WORKING PRESSURE

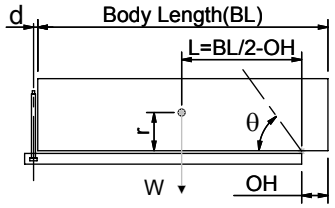

BODY LENGTH (BL)						OH
8750		9250		9750		
28	49°	27	46°			150
31	51°	29	48°	27	45°	450
35	53°	32	50°	30	47°	750

Tipping angle (θ)
Body + payload mass,W (tonne)

d = 0; r = 900; Working Pressure 120 bar

For guidance only;
Higher working pressures and tipping capacities may be possible.
To check your application email - applications@edbro.co.uk

NOTES

1. This cylinder is for lifting purposes only and side load conditions should be avoided
2. Cylinder is painted in primer paint to RAL5013
3. Refer to www.edbro.com for;-
   - Bracket details
   - Installation instructions that must be observed
   - Correct oil selection
   - An explanation of tipping capacity

Edbro
SETTING THE INDUSTRY STANDARD

Edbro plc
Nelson Street, Bolton, England, BL3 2JJ
Tel +44 (0) 1204 528888 Fax +44 (0) 1204 531957
Email: postmaster@edbro.com Web: www.edbro.com

Technical Specifications are subject to change without notice

Date Created/Updated: 20 June 2013

Refer www.edbro.com to confirm latest specification
All dimensions are in 'mm', unless otherwise stated

Cylinder Outline Drawing

CS170E57033B19K02C

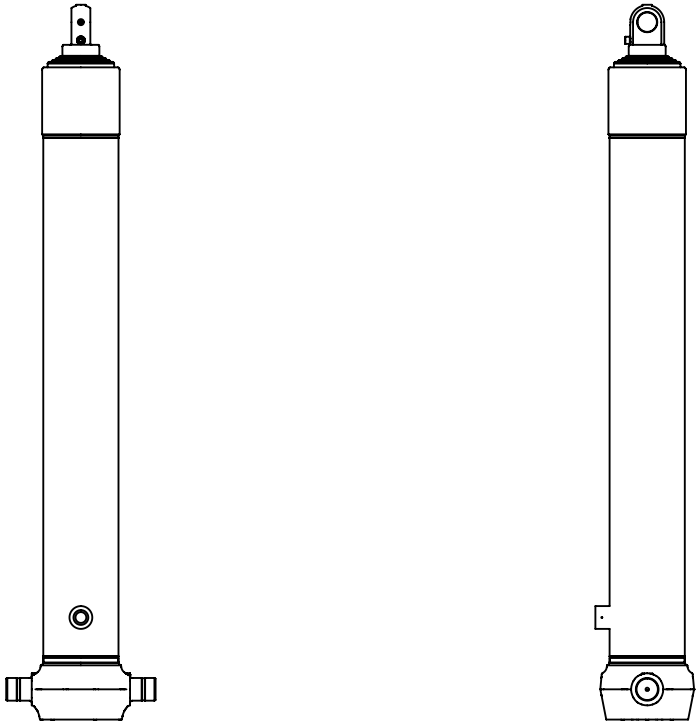

CS170E57033B19K02C

Edbro plc
Nelson Street, Bolton, Lancashire BL3 2JJ UK
Tel +44 (0) 1204 528888 Fax +44 (0) 1204 531957
Email: postmaster@edbro.com Web: www.edbro.com

SETTING THE INDUSTRY STANDARD

Technical Specifications are subject to change without notice

Date Created/Updated: 20 June 2013

Scale: 1:20

Cylinder 5 stage front end with Outer Cover

CS170056733B19A11C

****ALLOW 50mm TO REMOVE CAP FOR SERVICING**

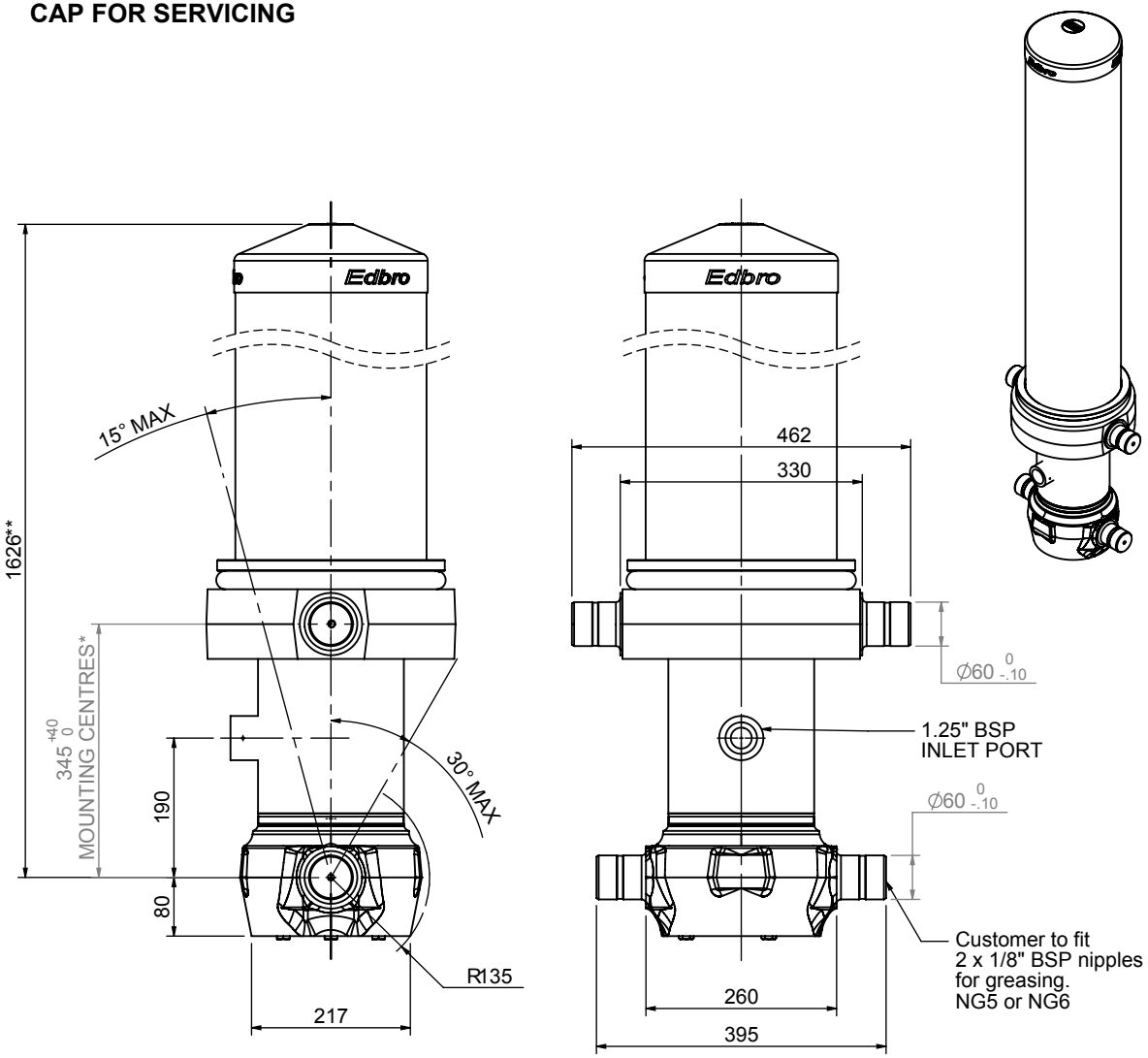

***Includes 12mm Pull Out**
All Stages Chrome Plated

SPECIFICATION — RATED CAPACITY : 37-51 TONNES***

Stage	Diameter	Length	Stroke	Swept Volume
OUTER COVER	261	1245	-	-
0	199	1575	-	-
1	176	1540	1314	32
2	155	1540	1337	25
3	136	1540	1347	20
4	117	1540	1362	15
5	98	1540	1367	10
Final stroke reduced by	0	Total (+5/-10)	6727	102
Cylinder Mass (Kg)	312.23	Priming Volume		21
Rated Pressure (Bar)	175	Total Volume (Litres)		123
Maximum Pressure (Bar)	175	Max. first stage thrust		260 KN

***TIPPING CAPACITY AT RATED PRESSURE

d = 229 ; r = 900

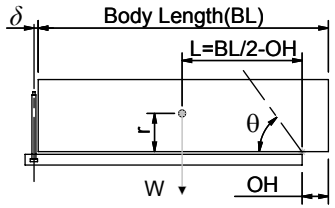

BODY LENGTH (BL)						OH
8250		8750		9250		
41	48°	39	45°	37	42°	150
45	50°	42	47°	40	44°	450
51	52°	46	49°	43	46°	750

Tipping angle (θ)

Body + payload mass,W (tonne)

For guidance only;
Higher Rated Pressures may be possible. To check your application, email Edbro plc at <applications@edbro.co.uk>

NOTES

- If hydraulic pressure is used to limit overloading, the system relief valve must be set to the Rated Pressure unless agreed otherwise by Edbro
- The system relief valve can be set to Maximum Pressure if the load is limited by other means.See RATINGS page for advice
- This cylinder is for lifting purposes only and sideload conditions must be avoided
- Cylinder is painted in primer paint to RAL5013
- See bracket options page BRKT01, BRKT02
- See installation instructions INSTALL01
- Use oil according to specification OIL01

Edbro
SETTING THE INDUSTRY STANDARD

Edbro plc
Nelson Street, Bolton, Lancashire BL3 2JJ UK
Tel +44 (0) 1204 528888 Fax +44 (0) 1204 531957
Email: postmaster@edbro.com Web: www.edbro.com

Technical Specifications are subject to change without notice

Date Created/Updated: 21 August 2009 16:02:09

Refer www.edbro.com to confirm latest specification
All dimensions are in 'mm', unless otherwise stated

Cylinder 5 stage front end with plain eye

CS180E57633B19A01

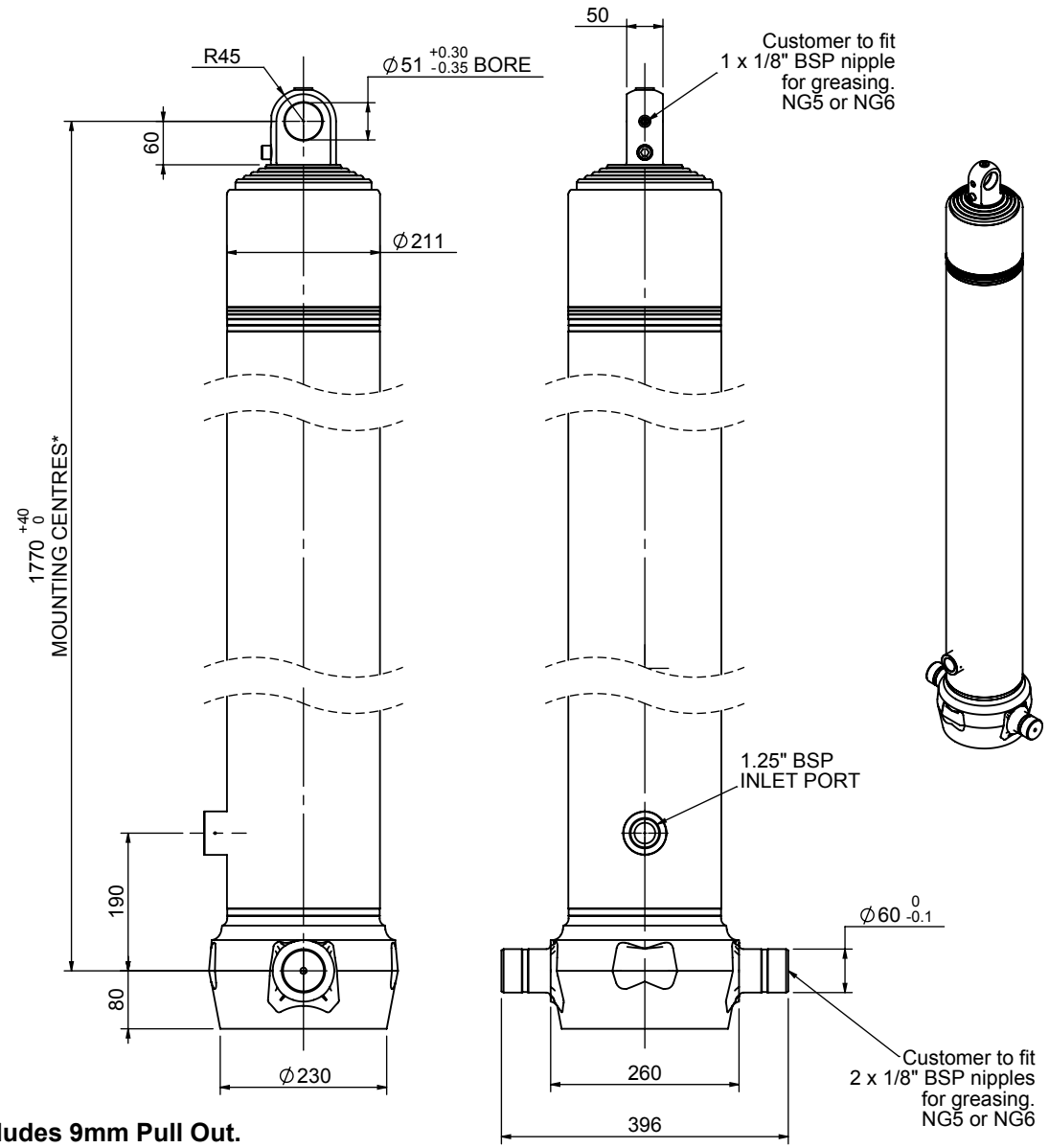

***Includes 9mm Pull Out.**
All Stages Chrome Plated

SPECIFICATION — TIPPING CAPACITY : 35-41 TONNES***

Stage	Diameter	Length	Stroke	Swept Volume
-	-	-	-	-
0	211	1755	-	-
1	188	1720	1498	42
2	167	1720	1517	33
3	147	1720	1527	26
4	127	1720	1542	20
5	105	1720	1547	13
		Total (+5/-10)	7631	134
Final stroke reduced by	0	Priming Volume		25
Cylinder Mass (Kg)	294	Total Volume (Litres)		159
Maximum Pressure (Bar)	190	Max. first stage thrust		265 KN

***TIPPING CAPACITY AT WORKING PRESSURE

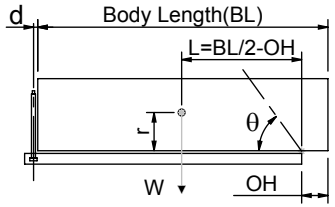

BODY LENGTH (BL)						OH
9250		9500		9750		
35	51°					150
38	52°	36	51°			450
41	55°	40	53°	38	51°	750

Tipping angle (θ)
Body + payload mass,W (tonne)

d = 0; r = 750; Working Pressure 133 bar

For guidance only;
Higher working pressures and tipping capacities may be possible.
To check your application email - applications@edbro.co.uk

NOTES

1. This cylinder is for lifting purposes only and side load conditions should be avoided
2. Cylinder is painted in primer paint to RAL5013
3. Refer to www.edbro.com for;-
   - Bracket details
   - Installation instructions that must be observed
   - Correct oil selection
   - An explanation of tipping capacity

JOST UK Ltd
Edbro House, Nelson Street, Bolton, Lancashire, BL3 2JJ, UK
Tel +44 (0) 1204 528888 Fax +44 (0) 1204 531957
Email: sales@jost-world.com Web: www.edbro.com

Technical Specifications are subject to change without notice
Date Created/Updated: 29 January 2020
Refer www.edbro.com to confirm latest specification
All dimensions are in 'mm', unless otherwise stated

Cylinder 5 stage front end with plain eye

CS180E58233S70A01C

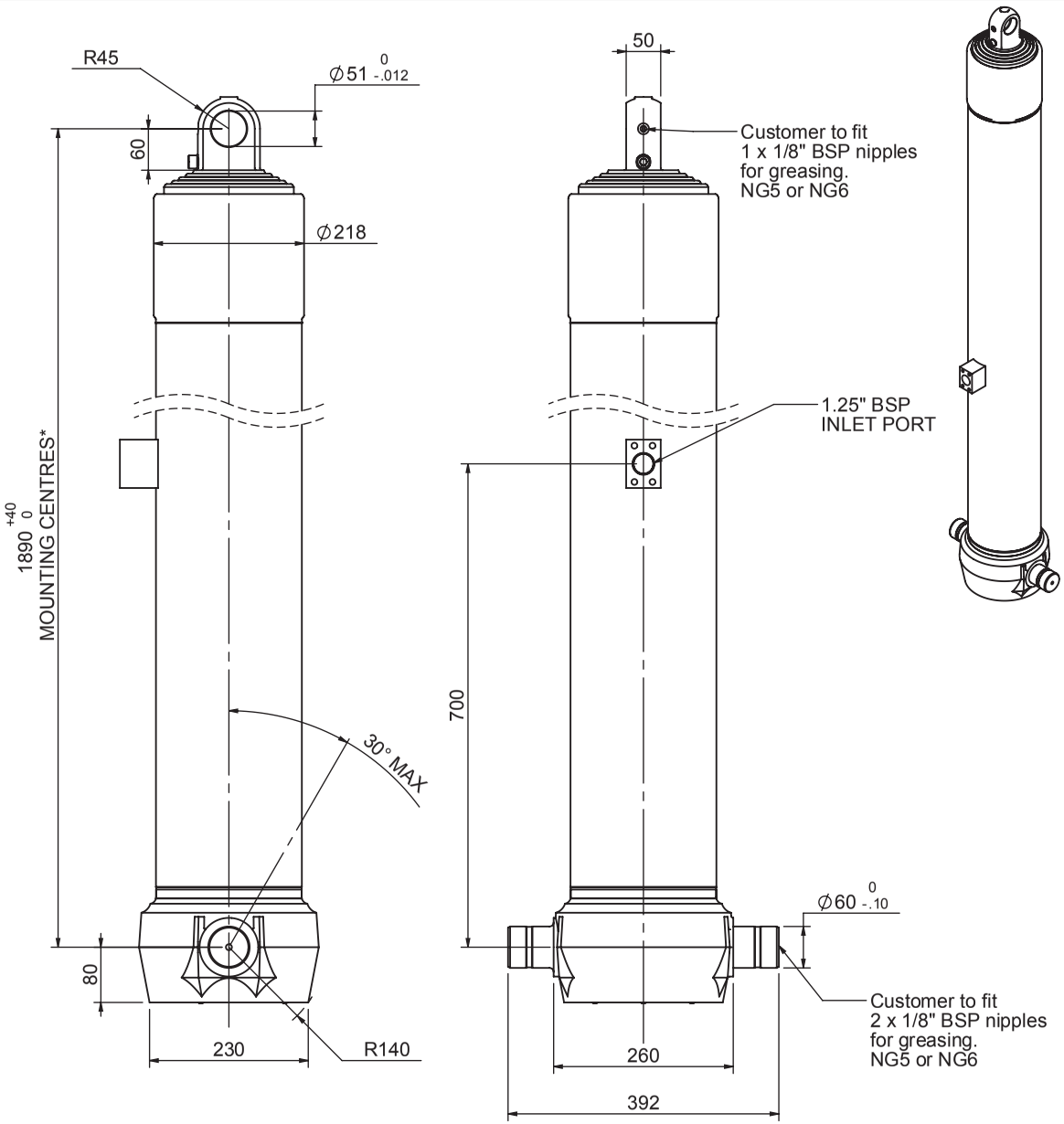

***Includes 9mm Pull Out**
All Stages Chrome Plated

SPECIFICATION — RATED CAPACITY : 27-31 TONNES**

Stage	Diameter	Length	Stroke	Swept Volume
-	-	-	-	-
0	211	1875	-	-
1	188	1840	1618	45
2	167	1840	1637	36
3	147	1840	1647	28
4	127	1840	1662	21
5	105	1840	1667	14
Final stroke reduced by	0	Total (+5/-10)	8231	144
Cylinder Mass (Kg)	320.65	Priming Volume		25
Rated Pressure (Bar)	110	Total Volume (Litres)		169
Maximum Pressure (Bar)	175	Max. first stage thrust		260 KN

**TIPPING CAPACITY AT RATED PRESSURE

d = 0 ; r = 900

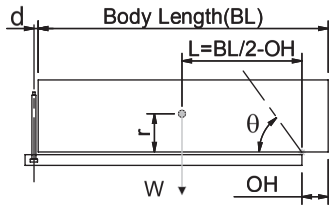

BODY LENGTH (BL)						OH
10500		11000		11500		
27	48°					150
29	49°	27	47°			450
31	51°	29	48°	28	46°	750

Tipping angle (θ)
Body + payload mass,W (tonne)

For guidance only;
Higher Rated Pressures may be possible. To check your application, email Edbro plc at <applications@edbro.co.uk>

NOTES

- If hydraulic pressure is used to limit overloading, the system relief valve must be set to the Rated Pressure unless agreed otherwise by Edbro
- The system relief valve can be set to Maximum Pressure if the load is limited by other means.See RATINGS page for advice
- This cylinder is for lifting purposes only and sideload conditions must be avoided
- Cylinder is painted in primer paint to RAL5013
- See bracket options page BRKT01, BRKT02
- See installation instructions INSTALL01
- Use oil according to specification OIL01

Edbro
SETTING THE INDUSTRY STANDARD

Edbro plc
Nelson Street, Bolton, Lancashire BL3 2JJ UK
Tel +44 (0) 1204 528888 Fax +44 (0) 1204 531957
Email: postmaster@edbro.com Web: www.edbro.com

Technical Specifications are subject to change without notice
Date Created/Updated: 24 November 2011 10:54:10
Refer www.edbro.com to confirm latest specification
All dimensions are in 'mm', unless otherwise stated

Cylinder 5 stage front end with outer cover

CS18L058233B19A11

** ALLOW 50mm TO REMOVE CAP FOR SERVICING

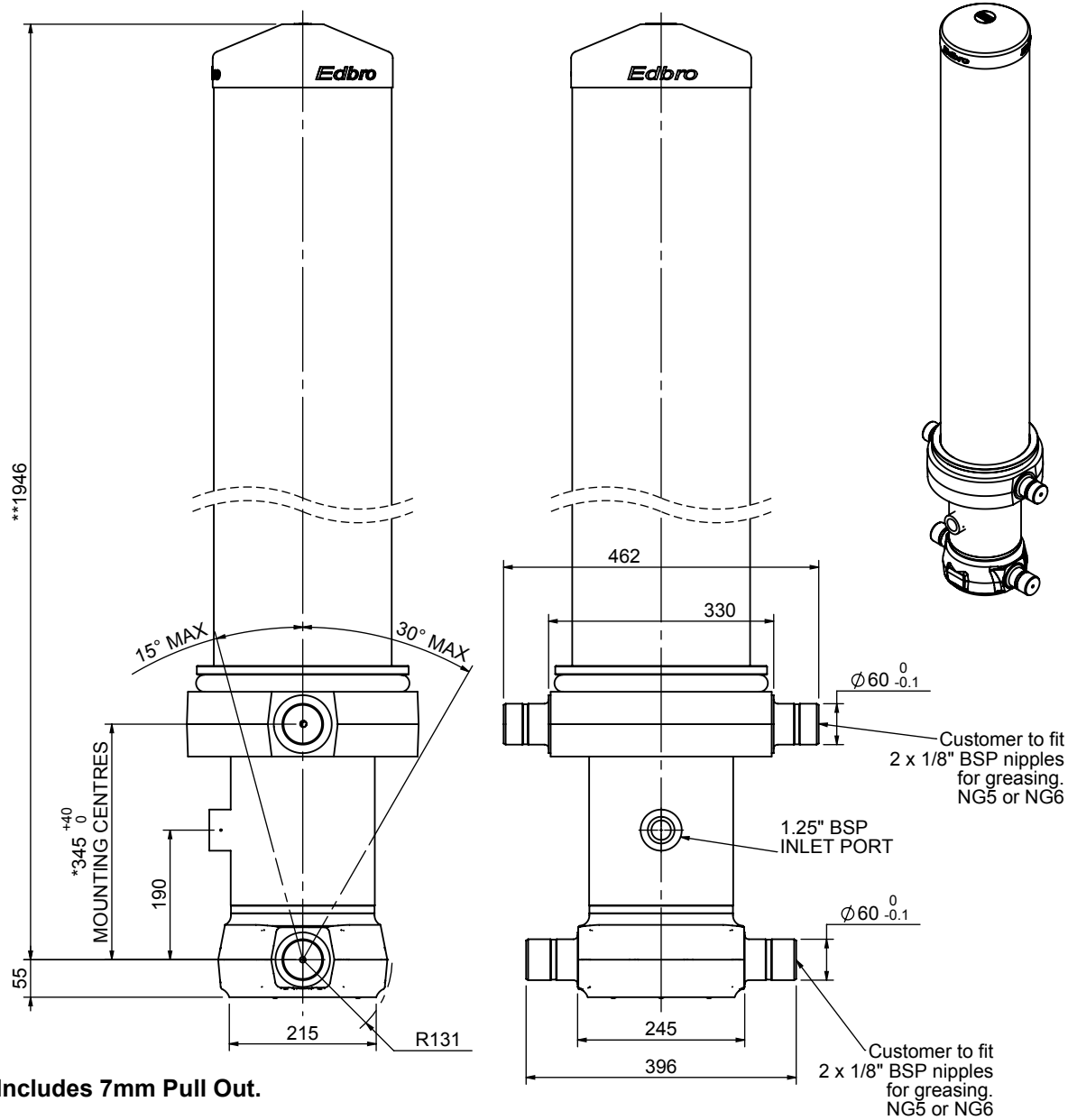

***Includes 7mm Pull Out.**

SPECIFICATION		TIPPING CAPACITY : 34-44 TONNES***		
Stage	Diameter	Length	Stroke	Swept Volume
OUTER COVER	261	1565	-	-
0	211	1875	-	-
1	188	1840	1620	45
2	167	1840	1637	36
3	147	1840	1647	28
4	127	1840	1662	21
5	105	1840	1667	14
		Total (+5/-10)	8233	144
Final stroke reduced by	0	Priming Volume		26.7
Cylinder Mass (Kg)	386	Total Volume (Litres)		170.7
Maximum Pressure (Bar)	190	Max. first stage thrust		200 KN

***TIPPING CAPACITY AT WORKING PRESSURE

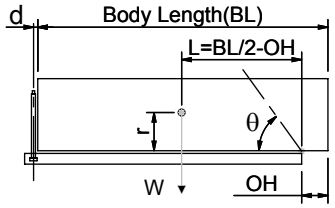

BODY LENGTH (BL)						OH
9500		10000		10500		
37	51°	35	48°	34	46°	150
40	53°	38	50°	36	47°	450
44	55°	41	52°	39	49°	750

Tipping angle (θ)

Body + payload mass,W (tonne)

d = 229; r = 900; Working Pressure 135 bar

For guidance only;
Higher working pressures and tipping capacities may be possible.
To check your application email - applications@edbro.co.uk

NOTES

1. This cylinder is for lifting purposes only and side load conditions should be avoided
2. Cylinder is painted in primer paint to RAL5013
3. Refer to www.edbro.com for;-
   - Bracket details
   - Installation instructions that must be observed
   - Correct oil selection
   - An explanation of tipping capacity

Edbro
SETTING THE INDUSTRY STANDARD

Edbro plc
Nelson Street, Bolton, England, BL3 2JJ
Tel +44 (0) 1204 528888 Fax +44 (0) 1204 531957
Email: postmaster@edbro.com Web: www.edbro.com

Technical Specifications are subject to change without notice

Date Created/Updated: 14 November 2014

Refer www.edbro.com to confirm latest specification
All dimensions are in 'mm', unless otherwise stated

Cylinder Outline Drawing

CS18L058233B19A11

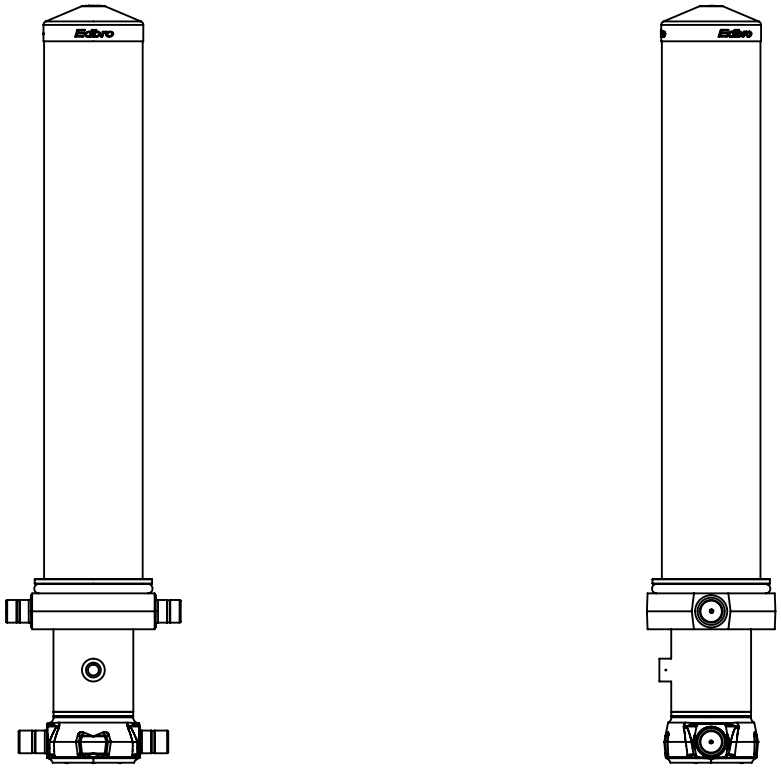

CS18L058233B19A11

Edbro plc
Nelson Street, Bolton, Lancashire BL3 2JJ UK
Tel +44 (0) 1204 528888 Fax +44 (0) 1204 531957
Email: postmaster@edbro.com Web: www.edbro.com

SETTING THE INDUSTRY STANDARD

Technical Specifications are subject to change without notice

Date Created/Updated: 14 November 2014

Scale: 1:20

Cylinder 4 stage front end with outer cover

CX1100303494B101

****ALLOW 50mm TO REMOVE CAP FOR SERVICING**

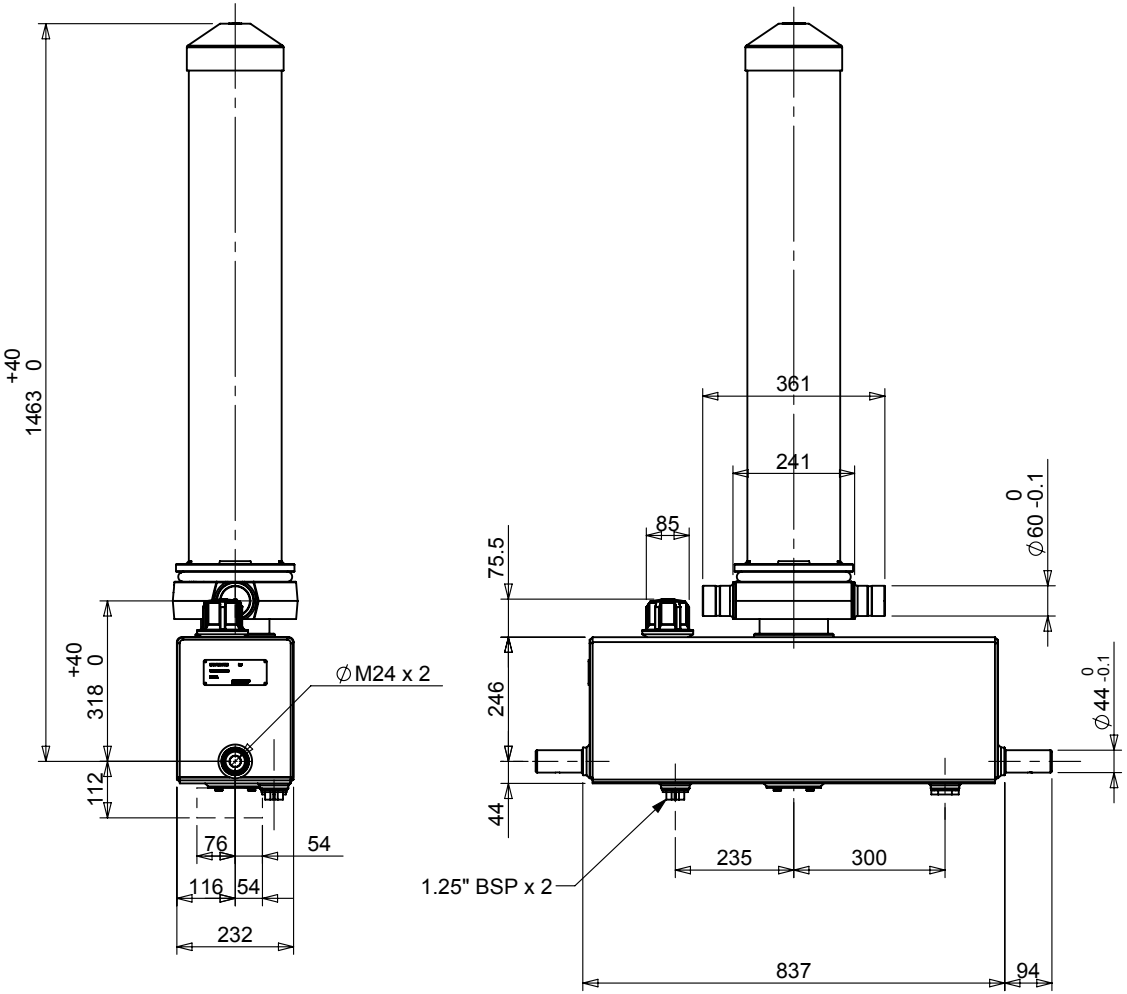

***Includes 14mm Pull Out.**

SPECIFICATION — TIPPING CAPACITY : 19-34 TONNES***

Stage	Diameter	Length	Stroke	Swept Volume
OUTER COVER	184	1090	-	-
0	136	1320	-	-
1	117	1340	1151	12
2	98	1340	1167	9
4	79	1340	1172	6
		Total (+5/-10)	3490	27
Final stroke reduced by	0	Priming Volume		10
Cylinder Mass (Kg)	182	Total Volume (Litres)		37
Maximum Pressure (Bar)	150	Oil Tank Capacity (L)		38

***TIPPING CAPACITY AT WORKING PRESSURE

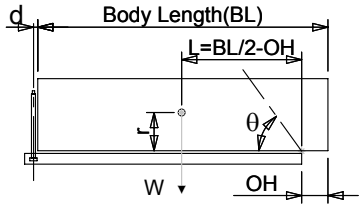

BODY LENGTH (BL)						OH
3750		4500		5250		
27	55°	21	45°	19	38°	150
		26	49°	21	41°	450
		34	53°	25	44°	750

Tipping angle (θ)

Body + payload mass,W (tonne)

d = 0; r = 900; Working Pressure 135 bar

For guidance only;
Higher working pressures and tipping capacities may be possible.
To check your application email - applications@edbro.co.uk

NOTES

1. This cylinder is for lifting purposes only and side load conditions should be avoided
2. Cylinder is painted in primer paint to RAL5013
3. Refer to www.edbro.com for;-
   - Bracket details
   - Installation instructions that must be observed
   - Correct oil selection
   - An explanation of tipping capacity

Edbro
SETTING THE INDUSTRY STANDARD

Edbro plc
Nelson Street, Bolton, England, BL3 2JJ
Tel +44 (0) 1204 528888 Fax +44 (0) 1204 531957
Email: postmaster@edbro.com Web: www.edbro.com

Technical Specifications are subject to change without notice

Date Created/Updated: 04 July 2016

Refer www.edbro.com to confirm latest specification
All dimensions are in 'mm', unless otherwise stated

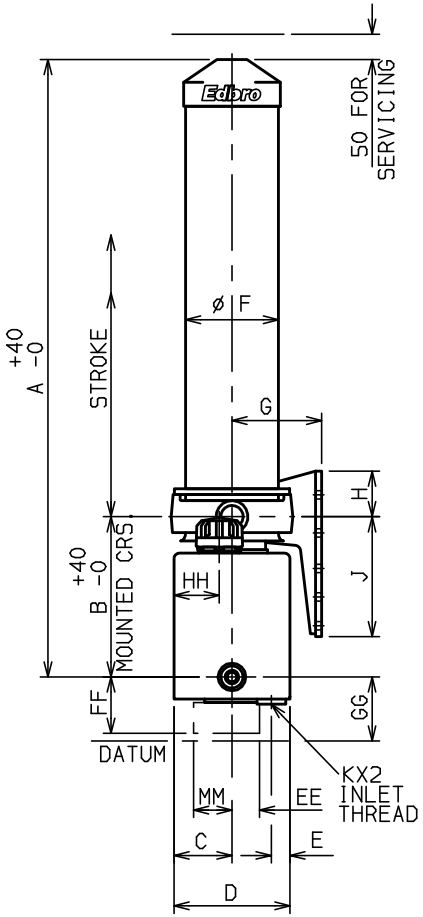

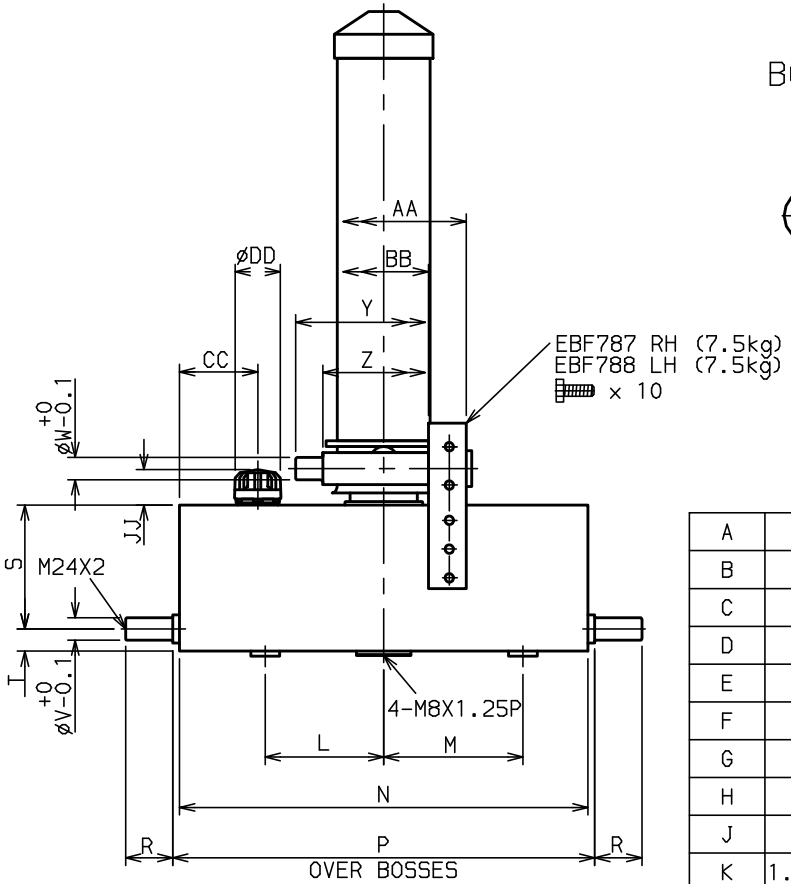

BOLT HOLE PATTERN

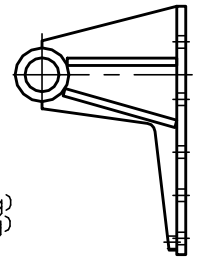

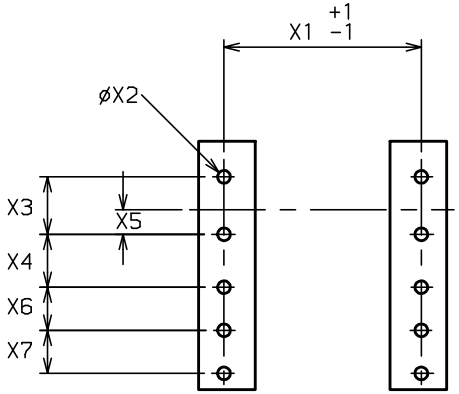

ISO BS3643 DIN 931 Gr8,8

M16 240Nm ø17xø30

A	1509
B	318
C	115
D	230
E	38
F	184
G	178
H	90
J	238
K	1.25"BSP
L	235
M	300
N	810
P	837
R	94
S	246
T	44
V	44.45
W	44.45
Y	349

Z	241
AA	327
BB	177
CC	155
DD	92
EE	54
FF	112
GG	127
HH	90
JJ	70
MM	76
X1	260
X2	17
X3	76
X4	70
X5	32
X6	57
X7	57

EXT	BORE	O.DIA	LENGTH	STROKE	THRUST AT 135 bar
O/C		184.15	1178		
0		135.75	1370		
1		116.65	1390	1205	14.70 t
2		97.80	1390	1217	10.33 t
3		79.30	1390	1222	6.79 t
			TOTAL	3644	

BODY LENGTH

4000	4250	4500	4750	5000	5250	5500	O/HANG
16 54°	16 51°	16 48°	16 45°				150
	16 53°	16 49°	16 46°	16 44°			300
	16 55°	16 51°	16 48°	16 45°			450
		16 53°	16 50°	16 47°	16 44°		600
		16 55°	16 52°	16 49°	16 46°		750
W α			16 54°	16 51°	16 48°	16 45°	900

W = BODY WEIGHT + PAYLOAD (t) α = ANGLE OF TIP (°)

SWEPT VOLUME	28 l
TOTAL VOLUME	33 l
OIL TANK CAPACITY	38 l
OPERATING PRESSURE	135 bar
MAXIMUM PRESSURE	150 bar
CYLINDER WEIGHT DRY	175 kg

DIMENSIONS IN MILLIMETRES UNLESS STATED OTHERWISE

DATE 13 MAR 98

Edbro THE INDUSTRY STANDARD

MAX LOAD	16 tonne

CYLINDER ASSEMBLY	CX1100303644A101

Cylinder 4 stage front end with outer cover

CX1100404271B510

****ALLOW 50mm TO REMOVE CAP FOR SERVICING**

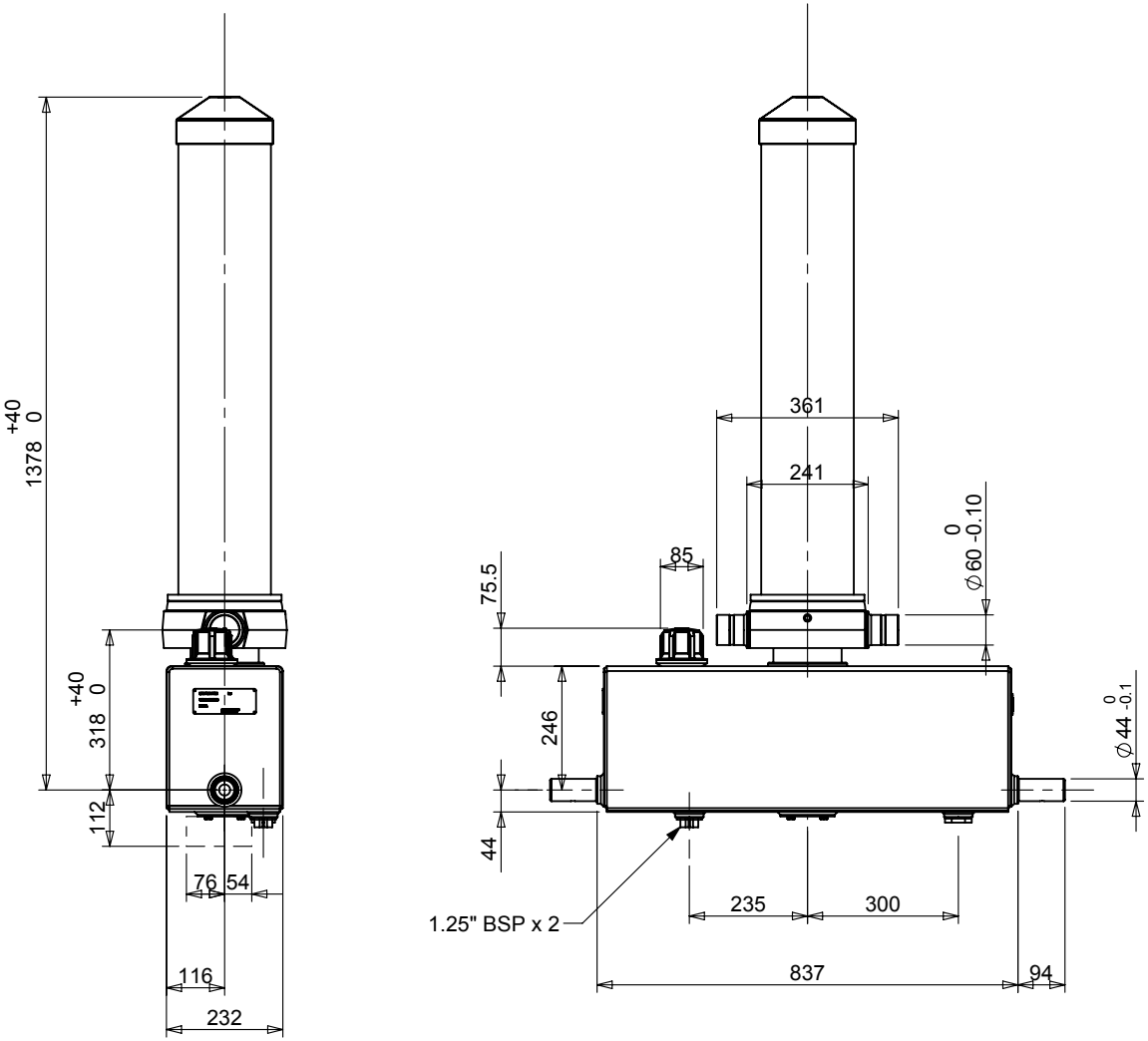

***Includes 14mm Pull Out.**
All stages chrome plated

SPECIFICATION — TIPPING CAPACITY : 12-30 TONNES***

Stage	Diameter	Length	Stroke	Swept Volume
OUTER COVER	184	1005	-	-
0	136	1220	-	-
1	117	1240	1051	11
2	98	1240	1067	8
3	79	1240	1072	5
4	63	1240	1077	3
		Total (+5/-10)	4267	27
Final stroke reduced by	0	Priming Volume		8
Cylinder Mass (Kg)	182	Total Volume (Litres)		35
Maximum Pressure (Bar)	150	Oil Tank Capacity (L)		38

***TIPPING CAPACITY AT WORKING PRESSURE

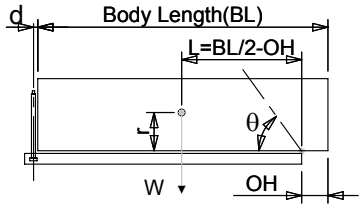

BODY LENGTH (BL)						OH
4750		5500		6250		
16	53°	13	45°	12	40°	150
20	57°	15	48°	13	42°	450
30	61°	19	51°	15	44°	750

Tipping angle (θ)
Body + payload mass,W (tonne)

d = 0; r = 900; Working Pressure 135 bar

For guidance only;
Higher working pressures and tipping capacities may be possible.
To check your application email - applications@edbro.co.uk

NOTES

1. This cylinder is for lifting purposes only and side load conditions should be avoided
2. Cylinder is painted in primer paint to RAL5013
3. Refer to www.edbro.com for;-
   - Bracket details
   - Installation instructions that must be observed
   - Correct oil selection
   - An explanation of tipping capacity

Edbro
SETTING THE INDUSTRY STANDARD

Edbro plc
Nelson Street, Bolton, England, BL3 2JJ
Tel +44 (0) 1204 528888 Fax +44 (0) 1204 531957
Email: postmaster@edbro.com Web: www.edbro.com

Technical Specifications are subject to change without notice
Date Created/Updated: 11 July 2018
Refer www.edbro.com to confirm latest specification
All dimensions are in 'mm', unless otherwise stated

Cylinder Outline Drawing

CX1100404271B510

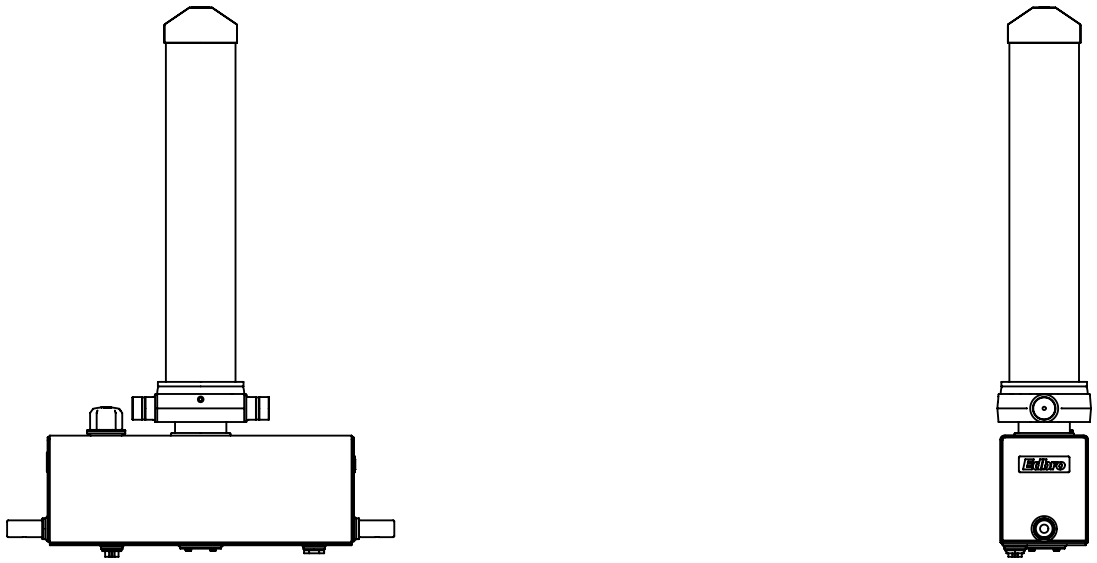

CX1100404271B510

Edbro plc
Nelson Street, Bolton, Lancashire BL3 2JJ UK
Tel +44 (0) 1204 528888 Fax +44 (0) 1204 531957
Email: postmaster@edbro.com Web: www.edbro.com

SETTING THE INDUSTRY STANDARD

Technical Specifications are subject to change without notice

Date Created/Updated: 11 July 2018

Scale: 1:20

Cylinder 4 stage front end with outer cover

CX1300404241B102

****ALLOW 50mm TO REMOVE CAP FOR SERVICING**

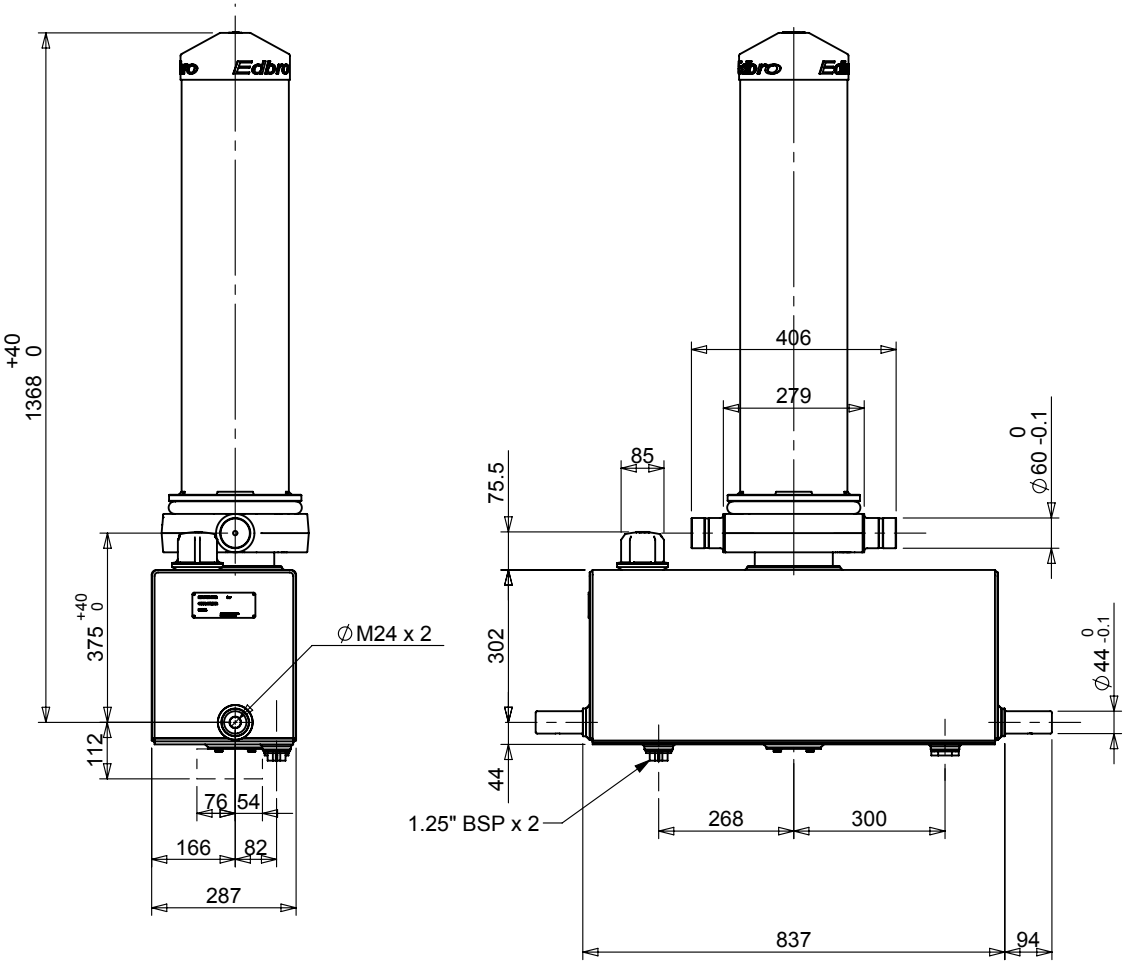

***Includes 9mm Pull Out.**

SPECIFICATION		TIPPING CAPACITY : 24-41 TONNES***		
Stage	Diameter	Length	Stroke	Swept Volume
OUTER COVER	213	950	-	-
0	155	1220	-	-
1	136	1240	1044	15
2	117	1240	1062	11
3	98	1240	1067	8
4	79	1240	1072	5
		Total (+5/-10)	4245	39
Final stroke reduced by	0	Priming Volume		10.7
Cylinder Mass (Kg)	235	Total Volume (Litres)		49.7
Maximum Pressure (Bar)	165	Oil Tank Capacity (L)		58

***TIPPING CAPACITY AT WORKING PRESSURE

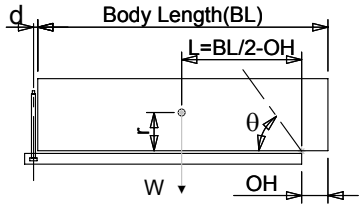

BODY LENGTH (BL)						OH
5250		5500		5750		
26	47°	25	45°	24	43°	150
31	50°	29	48°	27	45°	450
41	54°	36	51°	33	48°	750

Tipping angle (θ)

Body + payload mass,W (tonne)

d = 0; r = 900; Working Pressure 150 bar

For guidance only;
Higher working pressures and tipping capacities may be possible.
To check your application email - applications@edbro.co.uk

NOTES

1. This cylinder is for lifting purposes only and side load conditions should be avoided
2. Cylinder is painted in primer paint to RAL5013
3. Refer to www.edbro.com for;-
   - Bracket details
   - Installation instructions that must be observed
   - Correct oil selection
   - An explanation of tipping capacity

Edbro
SETTING THE INDUSTRY STANDARD

Edbro plc
Nelson Street, Bolton, England, BL3 2JJ
Tel +44 (0) 1204 528888 Fax +44 (0) 1204 531957
Email: postmaster@edbro.com Web: www.edbro.com

Technical Specifications are subject to change without notice

Date Created/Updated: 05 July 2016

Refer www.edbro.com to confirm latest specification
All dimensions are in 'mm', unless otherwise stated

Cylinder 4 stage front end with outer cover

CX1300404641B102

****ALLOW 50mm TO REMOVE CAP FOR SERVICING**

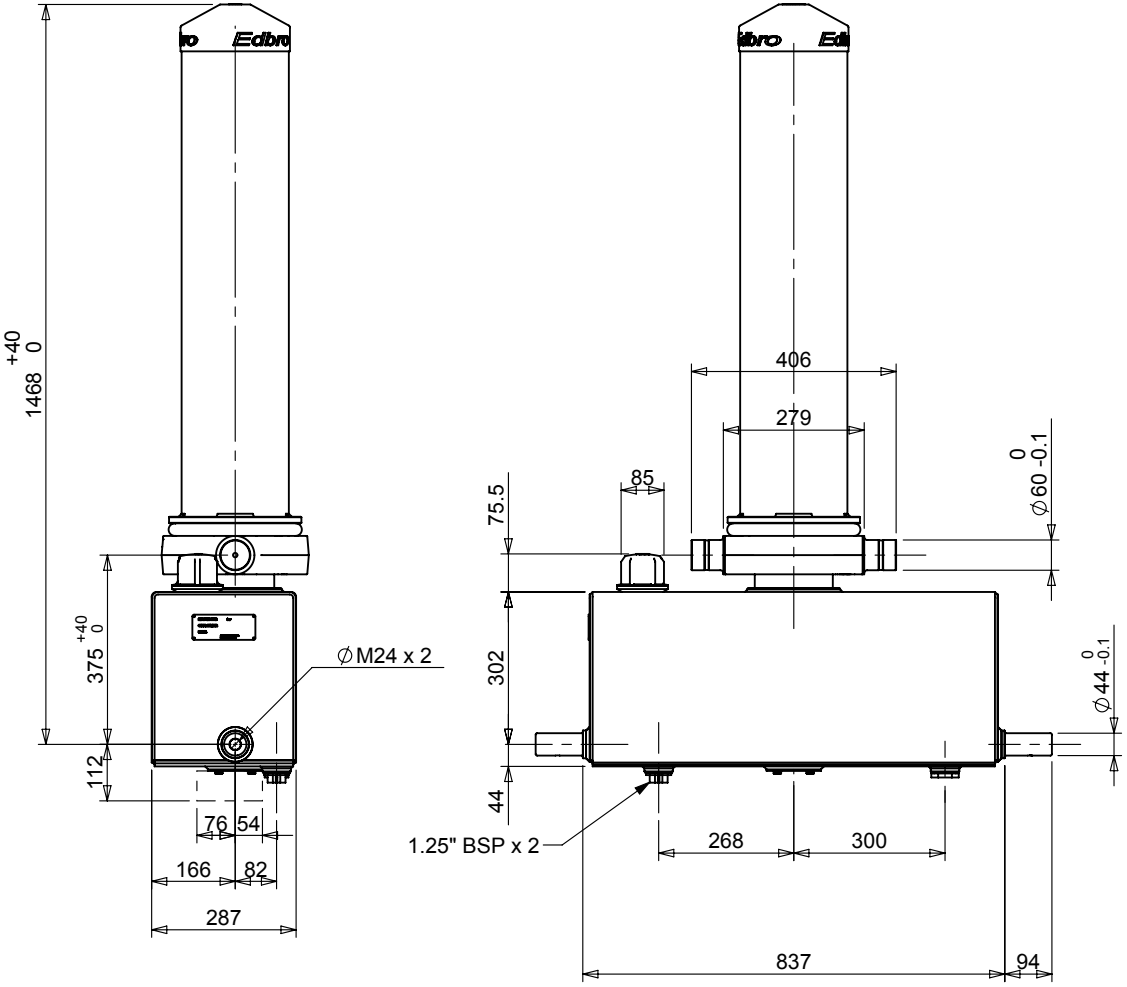

***Includes 9mm Pull Out.**

SPECIFICATION		TIPPING CAPACITY : 19-32 TONNES***		
Stage	Diameter	Length	Stroke	Swept Volume
OUTER COVER	213	1050	-	-
0	155	1320	-	-
1	136	1340	1144	17
2	117	1340	1162	12
3	98	1340	1167	9
4	79	1340	1172	6
		Total (+5/-10)	4645	44
Final stroke reduced by	0	Priming Volume		11.6
Cylinder Mass (Kg)	245	Total Volume (Litres)		55.6
Maximum Pressure (Bar)	150	Oil Tank Capacity (L)		58

***TIPPING CAPACITY AT WORKING PRESSURE

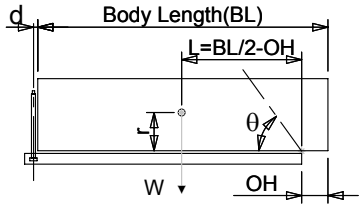

BODY LENGTH (BL)						OH
5250		6000		6750		
26	52°	22	45°	19	40°	150
32	55°	25	48°	21	42°	450
		29	50°	24	44°	750

Tipping angle (θ)
Body + payload mass,W (tonne)

d = 0; r = 900; Working Pressure 135 bar

For guidance only;
Higher working pressures and tipping capacities may be possible.
To check your application email - applications@edbro.co.uk

NOTES

1. This cylinder is for lifting purposes only and side load conditions should be avoided
2. Cylinder is painted in primer paint to RAL5013
3. Refer to www.edbro.com for;-
   - Bracket details
   - Installation instructions that must be observed
   - Correct oil selection
   - An explanation of tipping capacity

Edbro
SETTING THE INDUSTRY STANDARD

Edbro plc
Nelson Street, Bolton, England, BL3 2JJ
Tel +44 (0) 1204 528888 Fax +44 (0) 1204 531957
Email: postmaster@edbro.com Web: www.edbro.com

Technical Specifications are subject to change without notice

Date Created/Updated: 06 July 2016

Refer www.edbro.com to confirm latest specification
All dimensions are in 'mm', unless otherwise stated

Cylinder 4 stage front end with outer cover

CX1300405441B381

****ALLOW 50mm TO REMOVE CAP FOR SERVICING**

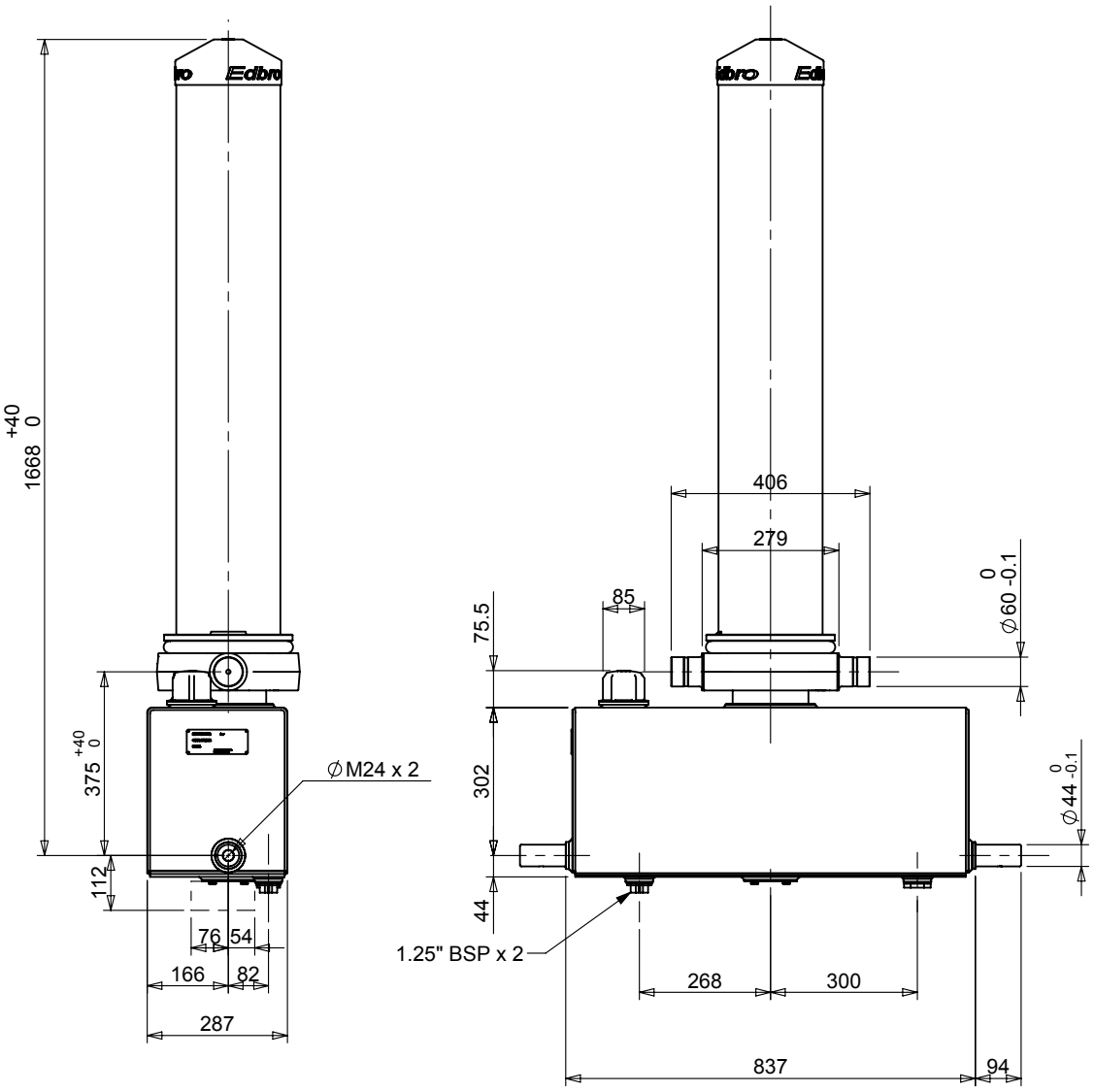

***Includes 9mm Pull Out.**

SPECIFICATION		TIPPING CAPACITY : 19-28 TONNES***		
Stage	Diameter	Length	Stroke	Swept Volume
OUTER COVER	213	1250	-	-
0	155	1520	-	-
1	136	1540	1344	20
2	117	1540	1362	15
3	98	1540	1367	10
4	79	1560	1372	7
		Total (+5/-10)	5445	52
Final stroke reduced by	0	Priming Volume		13.6
Cylinder Mass (Kg)	259	Total Volume (Litres)		65.6
Maximum Pressure (Bar)	150	Oil Tank Capacity (L)		58

***TIPPING CAPACITY AT WORKING PRESSURE

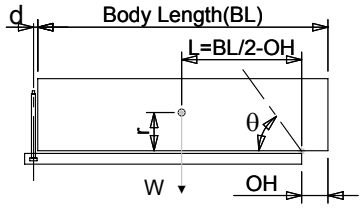

BODY LENGTH (BL)						OH
6750		7250		7750		
21	47	20	44°	19	41°	150
24	50	22	46	20	43	450
28	52	25	48	23	44	750

Tipping angle (θ)

Body + payload mass,W (tonne)

d = 0; r = 900; Working Pressure 135 bar

For guidance only;
Higher working pressures and tipping capacities may be possible.
To check your application email - applications@edbro.co.uk

NOTES

1. This cylinder is for lifting purposes only and side load conditions should be avoided
2. Cylinder is painted in primer paint to RAL5013
3. Refer to www.edbro.com for;-
   - Bracket details
   - Installation instructions that must be observed
   - Correct oil selection
   - An explanation of tipping capacity

Edbro
SETTING THE INDUSTRY STANDARD

Edbro plc
Nelson Street, Bolton, England, BL3 2JJ
Tel +44 (0) 1204 528888 Fax +44 (0) 1204 531957
Email: postmaster@edbro.com Web: www.edbro.com

Technical Specifications are subject to change without notice

Date Created/Updated: 05 July 2016

Refer www.edbro.com to confirm latest specification
All dimensions are in 'mm', unless otherwise stated